ERROR BUDGET ANALYSIS OF AUTOMATIC CANNONS ON ARMORED COMBAT VEHICLES

Walter Wayne Cannon
and
John Joseph Sweeney

ET KNOX LIBRARY
AL POSTGRADUATE SCHOOL

NAVAL POSTGRADUATE SCHOOL
Monterey, California

THESIS

ERROR BUDGET ANALYSIS OF AUTOMATIC CANNONS

ON ARMORED COMBAT VEHICLES

by

Walter Wayne Cannon

John Joseph Sweeney

September 1977

Thesis Advisor: Samuel H. Parry

Approved for public release; distribution unlimited.

T180046

REPORT DOCUMENTATION PAGE

READ INSTRUCTIONS BEFORE COMPLETING FORM

1. REPORT NUMBER
2. GOVT ACCESSION NO.
3. RECIPIENT'S CATALOG NUMBER

4. TITLE (and Subtitle)
Error Budget Analysis of Automatic Cannons On Armored Combat Vehicles

5. TYPE OF REPORT & PERIOD COVERED
Master's Thesis; September 1977

6. PERFORMING ORG. REPORT NUMBER

7. AUTHOR(s)
Walter Wayne Cannon
John Joseph Sweeney

8. CONTRACT OR GRANT NUMBER(s)

9. PERFORMING ORGANIZATION NAME AND ADDRESS
Naval Postgraduate School
Monterey, California 93940

10. PROGRAM ELEMENT, PROJECT, TASK AREA & WORK UNIT NUMBERS

11. CONTROLLING OFFICE NAME AND ADDRESS
Naval Postgraduate School
Monterey, California 93940

12. REPORT DATE
September 1977

13. NUMBER OF PAGES
91

14. MONITORING AGENCY NAME & ADDRESS(if different from Controlling Office)
Naval Postgraduate School
Monterey, California 93940

15. SECURITY CLASS. (of this report)
Unclassified

15a. DECLASSIFICATION/DOWNGRADING SCHEDULE

16. DISTRIBUTION STATEMENT (of this Report)

Approved for public release; distribution unlimited.

17. DISTRIBUTION STATEMENT (of the abstract entered in Block 20, if different from Report)

18. SUPPLEMENTARY NOTES

19. KEY WORDS (Continue on reverse side if necessary and identify by block number)

1. Miss Distance Analysis
2. Barrel Bend
3. Rapid Fire Cannons

20. ABSTRACT (Continue on reverse side if necessary and identify by block number)

This study presents an analysis of the fixed biases and variable errors affecting gun fire. The emphasis is placed on automatic cannons being developed for use as main guns for armored vehicles.

It is proposed that barrel bend has been overlooked as a primary cause of inaccurate fire and that automatic cannons will be particularly susceptible to this condition. A formula is derived for approximating the magnitude of bend that can occur.

A model is presented for estimating miss distance in the plane of the target as a result of fixed biases (including barrel bend) and other variable errors. A parametric analysis demonstrates the magnitude of resulting miss distance. Methods of avoiding the effects of barrel bend are presented.

Approved for public release; distribution unlimited.

Error Budget Analysis of Automatic Cannons On Armored Combat Vehicles

by

Walter Wayne Cannon
Major, United States Army
B.S., University of Tampa, 1971

John Joseph Sweeney
Captain, United States Army
B.S., Loyola College of Baltimore, 1969

Submitted in partial fulfillment of the
requirements for the degree of

MASTER OF SCIENCE IN MANAGEMENT

from the

NAVAL POSTGRADUATE SCHOOL
September 1977

NOX LIBRARY

ABSTRACT

This study presents an analysis of the fixed biases and variable errors affecting gun fire. The emphasis is placed on automatic cannons being developed for use as main guns for armored vehicles.

It is proposed that barrel bend has been overlooked as a primary cause of inaccurate fire and that automatic cannons will be particularly susceptible to this condition. A formula is derived for approximating the magnitude of bend that can occur.

A model is presented for estimating miss distance in the plane of the target as a result of fixed biases (including barrel bend) and other variable errors. A parametric analysis demonstrates the magnitude of resulting miss distance. Methods of avoiding the effects of barrel bend are presented.

TABLE OF CONTENTS

I. INTRODUCTION ---------- 9

II. NATURE OF THE PROBLEM ---------- 12

III. PRESENTATION AND ANALYSIS OF DATA ---------- 15

A. MISS DISTANCE ANALYSIS ---------- 15

1. Introduction ---------- 15

2. Classification of Error Types ---------- 16

3. Miss Distance ---------- 18

4. Mathematical Model for Miss Distance ---------- 21

5. Round Dispersion ---------- 28

6. Model Application ---------- 32

7. Summary ---------- 39

B. BARREL BEND ANALYSIS ---------- 40

1. Introduction ---------- 40

2. Approximation of Gun Barrel Surface Temperature (T_o)- 42

3. Approximating the Temperature Differential ---------- 45

4. Derivation of the Barrel Bend Formula ---------- 49

5. Calculating Bend for the ARES Cannon ---------- 55

6. Straightening Forces ---------- 57

7. Time Dependency ---------- 57

8. Avoiding Barrel Bend ---------- 58

9. Summary ---------- 58

IV. THE SIMULATION MODEL ---------- 60

A. MODEL DESCRIPTION AND ASSUMPTIONS ---------- 60

B. MODEL RESULTS ---------- 63

V. SUMMARY AND CONCLUSIONS ---------- 68

APPENDIX A: Assumed Firing Table and Effects Data ---------- 72

APPENDIX B: Computer Trial Output Tables ---------- 75

APPENDIX C: Computer Program ---------- 84

BIBLIOGRAPHY ---------- 88

INITIAL DISTRIBUTION LIST ---------- 90

LIST OF TABLES

I. Fire Control System Error Magnitudes - APFSDS Round ---------- 33

II. Fire Control System Error Magnitudes - HE Round ---------- 34

III. Miss Distance X-Error Formula - APFSDS Round ---------- 35

IV. Miss Distance X-Error Formula - HE Round ---------- 36

V. Miss Distance Y-Error Formula - APFSDS Round ---------- 37

VI. Miss Distance Y-Error Formula - HE Round ---------- 38

VII. Computer Output Sample ---------- 64

LIST OF FIGURES

1. Miss Distance Representation ---------- 18
2. Geometry of Muzzle Lateral Displacement ---------- 24
3. Time - Temperature Curves ---------- 40
4. Gun Barrel Cross Section ---------- 41
5. Temperature Curve ---------- 42
6. ARES Temperature Curves ---------- 43
7. Approximation of T_o ---------- 44
8. Gun Barrel Cross Section ---------- 47
9. Cross Section Temperature ---------- 51
10. Wind Generated Bend (ARES Cannon) ---------- 56
11. Trial Representation ---------- 62

I. INTRODUCTION

With the introduction of vastly improved threat weapons and observed numerical imbalances, the Department of Defense over the last decade initiated many programs to analyze existing and advanced state of the art technologies for armored combat vehicles of the future. According to the United States Army Armor and Engineer Board [1], these programs were designed to improve the firepower, mobility/agility and protection of future combat vehicles while concurrently reducing weight and cost.

As noted, an integral feature of these technological programs is the development of technology for improved firepower and current interest is vested in the medium caliber automatic gun. The Department of Defense analysts, especially research and development analysts, as well as tactical and strategic planners must evaluate data on the weapon performance. This need for methods of evaluating weapons systems becomes paramount since our future depends on intelligent and informed decisions at the earliest stages of any program.

A current example began early in the 1970's as the Defense Advance Research Projects Agency (DARPA) developed a program to demonstrate new technologies for future tanks. One of the major component technology areas in the program is a vehicle characterized by high mobility and agility and hence the program named, HIMAG. A critical element in the HIMAG program is the demonstration of the feasibility of a medium caliber automatic gun. The weapon pod proposed for evaluation is one containing the ARES 75 mm, solid propellant, rapid fire cannon using APFSDS and HE inert rounds. This 75mm gun is designed to fire in various modes and incorporates the capability for both rapid or single

shot fire. Here we have an explicit need for a method to evaluate the proposed weapon system in a burst mode to demonstrate the technical feasibility of the advanced automatic cannon.

However, Pfleger and Cerrato [2] report that to date there has been only limited effort directed towards providing reliable, accurate analysis of the performance of automatic gun systems. Primary emphasis has traditionally been to evaluate single shot weapon systems. Consequently, with the advent of the automatic cannon and the current need for effective weapon analysis as generated by the Department of Defense, this paper's objectives are to:

1. Develop a mathematical model to predict approximate miss distance of the projectile at the target plane for medium caliber automatic cannons in order to provide accurate and reliable information upon which hit probabilities can be developed for analysis by DOD.
2. Develop a mathematical model to approximate barrel bend and use this model to determine the possible amount of error caused by barrel bend using the ARPA 75mm automatic cannon as a test case.
3. Use the mathematical models developed in objectives "1" and "2" in a computerized parametric analysis of the ARPA 75mm cannon under a baseline M60A1 fire control system approximation and the more advanced XM-1 fire control system approximation.

A more detailed statement and presentation of the automatic cannon accuracy evaluation problems are discussed in Chapter II, Nature of the Problem. The body of the study is presented in Chapter III, Presentation and Analysis of Data. Chapter III, Section A, Miss Distance Analysis, provides a background for the reader on error sources involved with automatic cannons on combat vehicles as well as develops

the mathematical model on miss distance. Chapter III, Section B, Barrel Bend Analysis, provides a detailed analysis and mathematical model on barrel bend approximation. Once these mathematical models have been formulated, then Chapter IV, The Simulation Model, employs the models developed using the ARPA 75mm automatic cannon as a test case under several assumed weather conditions. Lastly, Chapter V is dedicated to a summary and conclusions of the study as generated during the research effort and from analysis of the simulation.

II. NATURE OF THE PROBLEM

Nearly 3000 tanks were destroyed during the 1973 Arab-Israeli war. Post-war analysis has shown that the clear majority of these tanks were destroyed by the main gun of other tanks. Thus, as late as 1973, the tank remains the primary anti-tank weapon. Analysis also reveals the total rounds fired considerably exceeds the quantity expected to be fired for the number of hits actually achieved. It can be inferred from the data that tank guns are not nearly so accurate as commonly believed.

In the event of a conventional war, armored vehicles constitute a primary threat to the security of our allies. If the tank is to be the primary anti-tank weapon in the future or if the tank is even to remain effective as an anti-tank weapon, something must be done to improve the accuracy of tank gunfire.

The primary effort toward improved accuracy has been the development of increasingly complex and sophisticated fire control instrumentation. Significant progress has been made in minimizing the effect of some of the factors which contribute to miss distance at the target, e.g. range estimation.

A second approach to improving the probability of hit is currently being investigated. That is, to fire a burst of several rounds at the target instead of a single round. If each round of a burst can be fired in precisely the same intended trajectory, round-to-round dispersion will cause a shotgun effect at the plane of the target. The probability of a hit in such a burst would clearly be higher than for a single round.

To demonstrate this approach a weapon must be developed that is capable of burst fire. This means firing anti-tank rounds at rates of fire approaching 120 rounds per minute or, more appropriately, 2 rounds per second. Weapons of this sort are being developed. The ARES 75mm gun currently in development has similar characteristics. This gun will be used as a model when, in the course of this paper, it is necessary to utilize the specific characteristics of a rapid fire gun.

Given a gun with rapid or burst fire capability, it must still be demonstrated that each round of a burst is fired with the same degree of accuracy. This requires the barrel to be pointing in the same direction. It must be demonstrated that the recoil or trunnion forces can be transferred through the entire vehicle and the gun platform and gun can be returned to the proper position in the time available. Rapid fire also means higher barrel temperatures. High temperatures can affect barrel life and accuracy. Safety is another consideration in view of the possibility of ignition of the propellant due to chamber temperature or "cook offs." It is clear that there is much to be considered and demonstrated in the development of a rapid fire tank gun.

A third approach is implied in the foregoing but should be addressed separately. Determine the factors which contribute to miss distance that have not been eliminated or minimized to date and find ways to compensate for or avoid their effects. It is felt that far too little attention is being given to two factors which make significant contribution to miss distance, i.e. round-to-round dispersion and barrel bend.

Round-to-round dispersion is primarily the result of differences in the physical characteristics of each round which affect the trajectory

of the round. This dispersion is well known to those familiar with gunfire in general. Unfortunately, this error has been deemed "random" which implies "unavoidable." It is felt that further efforts to minimize this factor are justified.

Barrel bend is a little known factor. Few recognize that gun barrels do, in fact, bend. Even fewer have considered the possible magnitude of the resulting miss distance. It is understood that weapons are being developed by West Germany and Great Britain that may avoid barrel bend or its effect. There is no information available to indicate that such a weapon is being considered in this country.

A primary purpose of this paper is to demonstrate that barrel bend can cause a significant error, particularly in view of the higher barrel temperatures that will occur with rapid fire systems.

III. PRESENTATION AND ANALYSIS OF DATA

A. MISS DISTANCE ANALYSIS

1. Introduction

This section describes an analytical method formulated for use in the evaluation of the performance of automatic gun systems for combat vehicles against stationary ground targets. The need for such analytical effort is readily apparent, especially in view of the current emphasis on armored combat vehicle technology and the HIMAG program evaluating the use of the 75mm automatic gun.

The first step in the analysis was to determine a significant effectiveness measure for the automatic gun. Traditionally, hit probability (P_H) has been used in this case and considerable effort in measuring this effectiveness has been accomplished and guidelines established for first round or single shot hit probability by Frankford Arsenal [3,4]. However, with the advent of the automatic gun which can fire in a burst or rapid fire mode, the hit probability of subsequent rounds fired in rapid succession must be addressed.

Secondly, it is felt that any analysis in this area must begin by determining the impact point of each round fired, either by single shot or burst fire. By mathematically modeling the impact point of each round fired at the target plane in relation to the center of the target, a base would be provided for any additional analysis in hit probability evaluations. Logically, the farther the impact point of a round from the center of target, the lower the overall hit probability. The use of all error sources is designed to simulate the conditions which can be expected under a variety of actual combat conditions. According to

Brodkin [3], this measure, Quasi-Combat Condition, is intended to reflect as realistically as possible the combat potential of the system in regard to delivery accuracy.

Lastly, under the scenario input to the simulation in Chapter IV, two terms mentioned by Cerrato [5] necessitate reiteration. An "occasion" is one tactical engagement between vehicles or stationary implacement. A "burst" is a series of rounds fired in rapid succession with the same point of aim.

2. Classification of Error Types

Since the standard target is two-dimensional, the effects of both horizontal (X) and vertical (Y) error sources must be considered. These gunnery error sources cause certain errors in different magnitudes and in both directions at the target plane. Pfleger and Bibbero [4] report that this leads to the assumption that the horizontal and vertical errors are independent of each other. This method is valid if the target is aligned with the coordinates of the plane in which the errors are considered.

From the classification of error types presented in Frankford Arsenal [4,5], gunnery errors can be classified into three types with respect to automatic cannons on combat vehicles.

a. Fixed Biases are a consequence of system design and use, and are constant for a given range. In the fire control systems in use today, correction is made for many of these fixed biases.

b. Variable Biases are considered to be constant for a specific engagement and/or burst of fire. They vary in a random fashion but not from round to round. Included in this category are:

(1) Occasion-to-Occasion biases are errors which change over time, but change is so slow that they can be considered a constant value

over the period of an engagement. Generally, these errors are induced by the weapon system design and the tactical situation.

(2) Burst-to-Burst biases are considered to have different values for each burst fired during the engagement and are considered to vary in a random manner.

c. Random Errors vary from round to round in such an unpredictable manner that no correction can be introduced by the fire control system. These random errors are classified as Round-to-Round errors and are the result of variations in ammunition rounds and characteristics of the weapon system.

As can be seen by the error classification, the mean (μ) of the distribution of any round fired is determined by the fixed biases of the system. That is, the system bias offsets or shifts the position of the standard normal curve from the target center of mass to the center of impact, ($\mu_{\cdot}$) The variable biases which are considered constant for the particular engagement and each burst within the engagement cause a dispersion (σ^2) about the impact point. The random errors provide an index of the additional dispersion (σ^2) distance from the mean of the distribution of any round fired in the burst.

In the firing of an automatic cannon, it is compulsory to calculate the effects of several of the variable biases which have traditionally been listed only as a system variable bias. Brodkin [3] reported that if the calculated effects of these variable biases can be accurately measured that this provides a more representative impact point. This is extremely important in automatic cannon gunnery, since deflection of the muzzle and muzzle velocity changes can realistically be encountered

in the burst of fire. As a result, if several variable biases are calculated they must be included as an additional fixed bias of the system and deleted as a source of variable bias.

3. Miss Distance

The point of impact at the target plane can be addressed by using the X and Y axes for reference. In most cases the gunner will have a line of sight to the target at the center of mass of the target. This point will be at coordinates 0,0 of the target plane. The offset from the target centerpoint when the projectile arrives at the target plane is due to fixed system biases and will be defined as the expected "Miss Distance." This expected miss distance is defined in both the azimuth (μX) and elevation (μY) directions at the target. Synonymously this miss distance is termed "X-error" and "Y-error" for azimuth and elevation respectively. (See Figure 1)

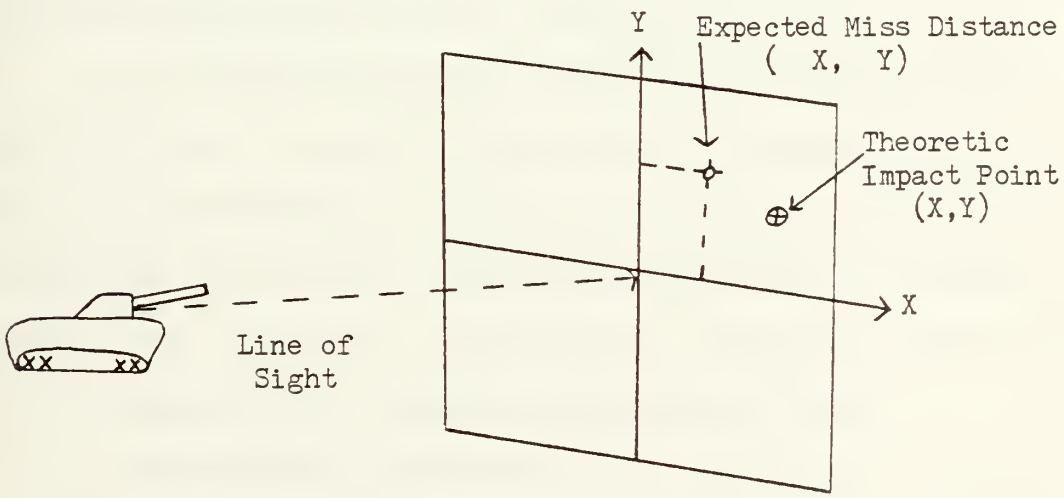

Figure 1: Miss Distance Representation

This study attempts to mathematically model the miss distance for any round at the target plane by considering the system fixed biases, as well as accounting for any variable biases which can be accurately measured during the subject firing engagement. In order to compute X-error, the total displacement of the round from a given muzzle position must be determined. Dickinson [6] reports this lateral displacement from the line of fire is caused by crosswind, rotation of the earth and drift as addressed below.

a. Drift (X_D) is caused by aerodynamic forces which act on the projectile along its intended route of flight. Most rounds which exhibit drift are spin-stabilized and have high spin rates. Any drift deflection is positive and arises from the clockwise spin of the projectile.

b. The rotation of the earth (X_E,Y_E) causes a system fixed bias as a result of Coriolis acceleration. However, the error is assumed for this study to fall into the category of Occasion-to-Occasion variable bias due to random characteristics. (σX_E, σY_E)

c. Any crosswind (X_W) force present during the projectile's flight will cause a deviation in azimuth from its intended trajectory. Normally this displacement is listed as a variable bias but it is felt that this must be addressed in the X-error computation for accuracy of trajectory under various Quasi-Combat Weather Conditions, since weather will be a definite factor influencing automatic gun firing.

d. Additionally, a deflection of the muzzle (X_M) will cause a displacement of the round in the same direction at the target. This deflection is caused primarily by tube or barrel bend, improper gun alignment, and trunnion force effect of previously fired rounds in the burst.

In past analysis of hit probability, Jump (X_J) and Parallax (X_P) have been listed as a fixed bias of the gun system. However when moderately sophisticated fire control systems are employed, these errors are usually fully corrected according to Pfleger and Bibbero [4]. As such, these fixed biases are considered a round dispersion (σ^2) factor and will not be a factor in any X-error model for evaluation of advanced technology gun systems.

The derivation of miss distance in the Y direction (Y-error) from the line of fire is caused by the following factors reported by Pfleger and Bibbero [4].

a. Deviation from projectile standard muzzle velocity (Y_V) is the result of powder temperature variations, tube heat transfer and tube bend.

b. Any deviation from the standard air density (Y_D) will cause drag effects of the air mass through which the projectile passes toward the target. Accordingly, any percent change from standard air density due to meteorological effects will increase or decrease the range of the projectile.

c. Deviation from standard air temperature (Y_A) will cause an increase or decrease in range of projectile similar to air density changes.

d. Any rangewind (Y_W) force will cause a deviation in elevation from the projectile's nominal trajectory.

e. Range error fixed bias (Y_R) is caused by inaccurate range estimation. Pfleger and Bibbero [4] report that for the laser rangefinder this may be taken as zero, but when distance measurements are made by the human eye, the fixed bias cannot be stated with certainty.

Thus, range estimation should only be considered as a variable bias (σY_R) since the crew's estimation of the range will probably change in a random fashion for each engagement.

f. Any elevation of the muzzle (Y_M) deviating from the appropriate superelevation setting for the specific range will increase or decrease the projectile range. This deviation is caused by gunner superelevation error, barrel bend, and trunnion force effect from previously fired rounds in the burst of fire.

As was previously noted in the X-error biases, there are certain biases which have traditionally been considered fixed but due to modern fire control systems, the assumption is made that they are fully corrected. Likewise, in computing Y-error at the target, the fixed biases of Jump (Y_J) and Parallax (Y_P) are considered to be zero and thus fully corrected.

In this analysis the use of X-error and Y-error, miss distances, give the analyst a good indication of the point of impact for either a single shot or a burst of several rounds. Chapter III, Section B includes a discussion of the impact of barrel bend on the automatic gun and the resultant position of the muzzle at time of firing, at which time the approximate point of impact can be determined for each round. By knowing the mean (μ) of the standard normal curve determined by the fixed bias of the system and the dispersion about that point in the form of a variance (σ^2), then integration of an assumed distribution over the target area is required to generate hit probabilities.

4. Mathematical Model for Miss Distance

The computation of miss distance requires a mathematical model which will express miss distance as a function of the sources of error

affecting the firing trajectory of the projectile. The variables which have an effect on miss distance at the target plane have previously been enumerated in this chapter. Using these variables in conjunction with the appropriate firing tables for a particular projectile, the model can be derived to give a good approximation of miss distance at the particular range in question.

This model is based on the following assumptions:

a. Variable biases can be combined with the fixed system biases to refine impact point (μ) if the value can be measured directly and hence the effect determined.

b. Jump (X_J, Y_J) fixed bias equals zero due to modern fire control systems and is treated only as an element of system dispersion (σ^2).

c. Parallax (X_P, Y_P) fixed bias equals zero due to modern fire control systems.

d. Range Estimation (Y_R) fixed bias equals zero and is addressed only as an element of the system dispersion (σ^2).

e. The firing table data used is accurate for the particular round in question and will provide appropriate variable coefficients.

f. The horizontal (X) and the vertical (Y) errors are independent of each other.

g. Fire control residual sensing error is accurately assessed.

h. Deflection of the muzzle as a result of trunnion forces equals zero for any round fired. This is in fact not realistic but little research in this area is available for the study.

The miss distance model for X-error (X_T) is developed by considering the variables which affect the lateral displacement of the

round from the line of fire. The variables previously listed in Chapter III are:

a. Drift

b. Crosswind

c. Muzzle lateral displacement resulting from inaccurate gunner laying, barrel bend, and effect of trunnion forces.

The predicted point of impact of the projectile in meters at the target can be modeled using these variables in conjunction with firing table data for the round and weapon system as illustrated below.

$$X_T = C_D + a_1 X_W + a_2 X_M \qquad (1)$$

where the coefficients a_1 and a_2 are given by:

$$a_1 = \frac{\text{d Drift}}{\text{d m/s crosswind}}$$

which is the change in projectile drift for a unit change in crosswind in meters per second from the firing table

$$a_2 = \frac{\text{d Lateral displacement}}{\text{d Lateral muzzle position}}$$

which is the change in lateral displacement of projectile for a unit change in lateral muzzle position expressed in mils.

The coefficient, a_2, is computed by use of a simple geometric triangulation for direct fire weapons as shown in Figure 2. The width of the change can be computed by the following formula.

$$\text{Width } (a_2) = \text{MILS} \times \frac{\text{Range}}{1000} \qquad (2)$$

For example, at 1000 meters, a 1 mil (m) change in muzzle angle toward the target will result in a 1 meter lateral displacement of the round at the target plane.

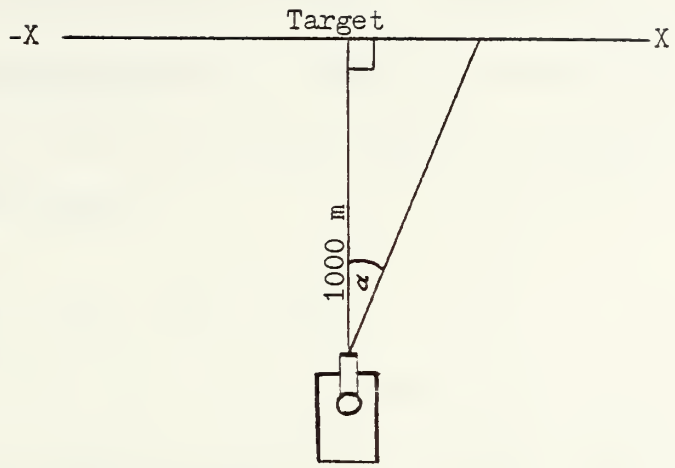

Figure 2: Geometry of Muzzle Lateral Displacement

The constant and variable derivations are:

C_D = Drift of the round from firing table data at the desired range

X_W = Crosswind in meters per second

(1) if crosswind is left to right = positive

(2) if crosswind is right to left = negative

X_M = Muzzle lateral displacement in mils resulting from the summation of gunner error (X_G), barrel bend (X_B), and trunnion force deflection (X_F). Thus:

$$X_M = X_G + X_B + X_F \qquad (3)$$

This model for X-error is valid only if no fire control system wind sensors are employed. If sensors are employed then the model must be modified to account for the accuracy of the sensor since any correction is a function of sensor and correction accuracy. The X-error will be the residual error remaining after sensing and corrective action to the system.

Past data on wind magnitudes indicates that an average of approximately 50% wind sensing and correction is possible but this is again a function of the sensor accuracy. Thus for the system being evaluated, the sensing error must be calculated correctly and applied to Equation 2 in the following manner.

$$X_T = C_D + a_1(X_W * S_W) + a_2X_M \qquad (4)$$

where S_W is the approximate residual sensing error for crosswind.

The miss distance model for Y-error (Y_T) is developed by considering the variables which affect the vertical displacement of the round from the line of fire to center of target. These variables were previously listed in Chapter III as:

a. Deviation from projectile standard muzzle velocity

b. Deviation from standard air density

c. Deviation from standard air temperature

d. Rangewind

e. Muzzle vertical displacement resulting from inaccurate gunner laying and barrel bend,

The model below can be used to estimate the Y-error in meters at the target plane by inserting these variables into the general equation:

$$Y_T = -C_1 + a_1Y_V + a_2Y_D + a_3Y_A + a_4Y_W + a_5Y_M \qquad (5)$$

where the constants and coefficients are defined as follows:

$$-C_1 = -(\text{Superelevation}(\phi_S) * \frac{\text{d elevation}}{\text{d muzzle elevation}})$$

$$a_1 = \frac{\text{d elevation}}{\text{d m/s standard muzzle velocity}}$$

which is the change in elevation for a unit change in meters per second from standard muzzle velocity as published for the projectile.

$$a_2 = \frac{\text{d elevation}}{\text{d percent standard air density}}$$

which is the change in elevation for a 1% change from standard air density as listed in the firing tables

$$a_3 = \frac{\text{d elevation}}{\text{d percent standard air temp}}$$

which is the change in elevation for a 1% change from standard air temperature as listed in the firing tables

$$a_4 = \frac{\text{d elevation}}{\text{d meter/sec. rangewind}}$$

which is the change in elevation for a unit change of rangewind as listed in the firing tables

$$a_5 = \frac{\text{d elevation}}{\text{d muzzle elevation}}$$

which is the change in elevation for a 1 mil elevation of the muzzle per firing tables.

Once the general model is established for the specified round and range, then Equation 5 is used to establish Y-error at the target plane by input to the following variables:

Y_V = the change in meters per second from standard muzzle velocity of the projectile specification data

(1) if the muzzle velocity increases, then Y_V is positive

(2) if the muzzle velocity decreases, then Y_V is negative

Y_D = the percentage increase/decrease from the standard air density used in computing firing table data since firing tables are

computed using the International Civil Aviation Organization (ICAO) standard atmosphere. Standard density must be adjusted accordingly as altitude above sea level and geographic area are changed. The model for calculating the air density in gms/cc is defined in Humphreys [7] as:

$$= \frac{1.2930 * 10^{-3}}{1 + 2.039 * 10^{-3}(t-32)} * \frac{B-0.378e}{29.921} \qquad (6)$$

where

t = air temperature in degrees Farenheit

B = total pressure in inches of mercury

e = vapor pressure in mm of mercury

By use of the tables in Smithsonian [8], a vapor pressure can be determined for any temperature and relative humidity (RH). Similarly, B (the total pressure in inches of mercury) can be determined at any standard atmospheric altitude from Humphreys [7].

Y_A = the percentage increase/decrease from the standard air temperature. The ICAO standard air temperature at sea level (0 altitude) is 15°C and must be adjusted for altitude variation.

Y_W = rangewind in meters per second

(1) if the direction of the wind is from the target toward the combat vehicle along the line of fire then Y_W is negative

(2) if the direction of the wind is from the combat vehicle toward the target along the line of fire then Y_W is positive.

Y_M = the verticle muzzle displacement in mils (‰) resulting from gunner superelevation adjustment (Y_G), barrel bend (Y_B), and trunnion force elevation (Y_F). Thus,

$$Y_M = Y_G + Y_B + Y_F \qquad (7)$$

As with the mathematical model for computing miss distance in the X-direction, this model similarly is valid only when no sensors are used for sensing wind, air temperature and air density. When sensors are used, the residual error is a function of the sensing accuracy of the fire control system. For incorporation of sensors into the model, the percentage of each residual error source must be calculated. After calculation of these percentage values for the variables in question, the Y-error model becomes:

$$Y_T = -C_1 + a_1 Y_V + a_2(Y_D * S_D) + a_3(Y_A * S_A) + a_4(Y_W * S_W) + a_5 Y_M \quad (8)$$

where S_D, S_A, and S_W are the percentage of residual sensing error for air density, air temperature, and rangewind respectively.

5. Round Dispersion

By using the mathematical models previously developed for both X and Y Miss Distance, the theoretic impact point at the target plane can be determined for any round fired either in a single shot or burst fire mode. The X and Y-error constitute an offset between the mean of the normal curve (center of impact) and the center of the target according to Pfleger and Bibbero [4]. It can be seen that the greater the expected miss distance due to fixed biases, the lower the hit probability.

In Chapter III, Section A2 all classes of gunner/fire control system errors were defined. The magnitude of these errors - both fixed bias or miss distance, and variable errors - is affected by the sophistication of the fire control system used.

Since sophistication of the basic miss distance models has already been accomplished to account for fire control system product improvement, the next area of concern is the total variation of the system about the target centerpoint of each round fired. Here again, it is felt that fire control system product improvement must be addressed.

The ARPA HIMAG program is working with several baseline fire control system configurations to study the effects of component improvements and in defining minimum performance requirements. For purposes of this analysis it was felt that the model could be exercised by using the following two HIMAG baseline configurations as listed in General Motors Corporation [8].

a. M60A1 Approximation:

   Slaved Ballistic Reticle Az,El

   Superelevation Only - No Sensors

   Manual Range Estimations

   Direct View Day Only OPTICS

b. XM-1 Approximation:

   Independently Stabilized Gun Director Az,El

   Full Solution Gun Offsets

   Laser Rangefinder

   Sensor and Manual Estimates

   Direct View Optics (Day), FIR Biocular

Using the classes of error from Chapter III, Section 2 and the theory of error components considered in Pfleger and Bibbero [4], a breakdown of these errors by class can be made.

"Round-to-Round" errors (which are totally random since no correction can be made to the system by the fire control system) are

caused by:

a. Ammo Dispersion ($\sigma X_A, \sigma Y_A$)

b. Jump Dispersion ($\sigma X_J, \sigma Y_J$)

These random errors will be the same for any type fire control system and range. Round-to-round errors take on different values for each round fired in a burst and Cerrato [5] considers them to be independent and normally distributed. The combined standard deviation in one dimension for these random errors is calculated from the component error sources where

$$\sigma X_{RR} = (\sigma X_A^2 + \sigma X_J^2)^{\frac{1}{2}} \tag{9}$$

and

$$\sigma Y_{RR} = (\sigma Y_A^2 + \sigma Y_J^2)^{\frac{1}{2}} \tag{10}$$

"Burst-to-Burst" biases are random and by their very nature will take on a constant value for the entire burst of fire. These errors are caused by:

a. Gun Pointing (Laying) ($\sigma X_L, \sigma Y_L$)

b. Visual Resolution ($\sigma X_{\underline{V}}, \sigma Y_{\underline{V}}$)

It is estimated by Cerrato [5] that these errors will be independent and normally distributed and the combined standard deviations are of the form:

$$\sigma X_{BB} = (\sigma X_L^2 + \sigma X_{\underline{V}}^2)^{\frac{1}{2}} \tag{11}$$

and

$$\sigma Y_{BB} = (\sigma Y_L^2 + \sigma Y_{\underline{V}}^2)^{\frac{1}{2}} \tag{12}$$

"Occasion-to-Occasion" biases change so slowly that they can be considered constant for the period of engagement against a stationary target. Falling into this category are:

a. Boresight Loss ($\sigma X_B, \sigma Y_B$)

b. Fire Control ($\sigma X_F, \sigma Y_F$)

c. Ranging (σY_R)

d. Cant ($\sigma X_C, \sigma Y_C$)

e. Angle of Site (σY_S)

f. Earth Rate ($\sigma X_E, \sigma Y_E$)

g. Tube Droop (σY_D)

h. Zeroing (1200 M) ($\sigma X_Z, \sigma Y_Z$)

For approximation purposes these errors can be considered independent and normally distributed, and the combined standard deviations are of the form:

$$\sigma X_{00} = (\sigma X_B^2 + \sigma X_F^2 + \sigma X_C^2 + \sigma X_E^2 + \sigma X_Z^2)^{\frac{1}{2}} \qquad (13)$$

and

$$\sigma Y_{00} = (\sigma Y_B^2 + \sigma Y_F^2 + \sigma Y_R^2 + \sigma Y_C^2 + \sigma Y_S^2 + \sigma Y_E^2 + \sigma Y_D^2 + \sigma Y_Z^2)^{\frac{1}{2}} \qquad (14)$$

These errors are not presented as an all inclusive list for every weapon system in use. They represent the authors' best list for use in approximating the fire control systems being presented in this study. Additionally, the computations performed in computing the individual standard deviation values are based on guidelines established in Pfleger and Bibbero [4] and are approximations only. Accordingly, more exact values should be used and additional errors accounted for when available for use.

After categorizing the various errors for analysis, an approximation of the system error magnitudes for total dispersion about the miss distance point can be computed. Tables I and II were generated by combining assumed firing table data with suggested error magnitude computations in Pfleger and Bibbero [4] for both the ARPA APFSDS and HE rounds.

6. Model Application

Using assumed firing table data for both the ARPA APFSDS and HE rounds listed in Appendix A, the miss distance model can be applied to both the M60A1 and XM-1 fire control system configurations. By generating the constant and coefficients for the model, these equations can then be used in the simulation of miss distance presented in Chapter IV.

To compute X-error, the mathematical models developed in Chapter III, Section A4 are used. (See Equation 1 for M60 FCS configuration and Equation 4 for XM-1 FCS approximation). Inserting appropriate firing table data at the desired range into the model results in Miss Distance formulas for use in simulation. These formulas are summarized in Table III and IV.

The mathematical models previously developed in Chapter III, Section A4, are used for computing Y-error at the target plane. (See Equation 5 for M60 FCS configuration and Equation 8 for XM-1 FCS approximation). Tables V and VI were generated for the ARPA APFSDS and HE projectiles by inserting assumed firing table data into the basic mathematical models. Additionally it is assumed that residual sensing errors are 1%, 2% and 3% respectively for density, air temperature, and rangewind.

TABLE I
FIRE CONTROL SYSTEM ERROR MAGNITUDES
APFSDS ROUND
QUASI-COMBAT CONDITIONS

	M60A1 APPROXIMATION				XM-1 APPROXIMATION			
	1500 M		2500 M		1500 M		2500 M	
Error Source	Azimuth	Elev	Azimuth	Elev	Azimuth	Elev	Azimuth	Elev
Round-to-Round								
$\sigma X_A, \sigma Y_A$	.320	.280	.320	.280	.320	.280	.320	.280
$\sigma X_J, \sigma Y_J$	.220	.300	.220	.300	.220	.300	.220	.300
Burst-to-Burst								
$\sigma X_L, \sigma Y_L$	.254	.254	.153	.153	.020	.070	.020	.070
$\sigma X_V, \sigma Y_V$	.060	.060	.060	.060	.060	.060	.060	.060
Occasion-to-Occasion								
$\sigma X_B, \sigma Y_B$	.080	.080	.080	.080	.080	.080	.080	.080
$\sigma X_F, \sigma Y_F$	.070	.070	.070	.070	.070	.070	.070	.070
σY_R	-	.624	-	1.120	-	.006	-	.006
$\sigma X_C, \sigma Y_C$	.252	.001	.436	.001	-	-	-	-
σY_S	-	.011	-	.019	-	.011	-	.019
$\sigma X_E, \sigma Y_E$	.075	.075	.125	.125	.075	.075	.125	.125
$\sigma X_Z, \sigma Y_Z$	.212	.220	.294	.242	.170	.185	.198	.210

NOTES:

(1) All error values represent one standard deviation (1) of the error source measured in mils

(2) $X_L = \frac{a_X}{3} * \frac{1000}{R}$ $\qquad Y_L = \frac{a_Y}{3} * \frac{1000}{R}$

where a_X and a_Y = $\frac{1}{2}$ target size in each dimension (mils)
R = Target Range (meters)

(3) Gun laying errors in XM-1 FCS configuration reflect testing results

TABLE II
FIRE CONTROL SYSTEM ERROR MAGNITUDES
HE ROUND
QUASI-COMBAT CONDITIONS

	M60A1 APPROXIMATION				XM-1 APPROXIMATION			
	1500 M		2500 M		1500 M		2500 M	
Error Source	Azimuth	Elev	Azimuth	Elev	Azimuth	Elev	Azimuth	Elev
Round-to-Round								
$\sigma X_A, \sigma Y_A$	.320	.280	.320	.280	.320	.280	.320	.280
$\sigma X_J, \sigma Y_J$	.220	.300	.220	.300	.220	.300	.220	.300
Burst-to-Burst								
$\sigma X_L, \sigma Y_L$	.254	.254	.153	.153	.020	.070	.020	.070
$\sigma X_V, \sigma Y_V$	.060	.060	.060	.060	.060	.060	.060	.060
Occasion-to-Occasion								
$\sigma X_B, \sigma Y_B$	.080	.080	.080	.080	.080	.080	.080	.080
$\sigma X_F, \sigma Y_F$	.070	.070	.070	.070	.070	.070	.070	.070
σY_R	-	1.684	-	3.792	-	.016	-	.022
$\sigma X_C, \sigma Y_C$	.591	.001	1.144	.001	-	-	-	-
σY_S	-	.025	-	.049	-	.025	-	.049
$\sigma X_E, \sigma Y_E$	.075	.075	.125	.125	.075	.075	.125	.125
$\sigma X_Z, \sigma Y_Z$	.341	.220	.605	.242	.170	.185	.198	.211

NOTES:

(1) All error values represent one standard deviation (1) of the error source measured in mils

(2) $X_L = \frac{a_X}{3} * \frac{1000}{R}$ $\qquad$ $Y_L = \frac{a_Y}{3} * \frac{1000}{R}$

where a_X and a_Y = $\frac{1}{2}$ target size in each dimension (mils)
R = Target Range (meters)

(3) Gun laying errors in XM-1 FCS configuration reflect testing results

TABLE III
MISS DISTANCE X-ERROR FORMULAS
APFSDS ROUND UNDER QUASI-COMBAT CONDITIONS

M60A1 FCS APPROXIMATION

1500 Meters

$$X_T = 0 + .0358X_W + 1.5X_M$$

2500 Meters

$$X_T = 0 + .0983X_W + 2.5X_M$$

XM-1 FCS APPROXIMATION

1500 Meters

$$X_T = 0 + .0358(X_W * .03) + 1.5X_M$$

2500 Meters

$$X_T = 0 + .0983(X_W * .03) + 2.5X_M$$

NOTE: Residual Sensing Error for Crosswind Assumed = 3%

TABLE IV
MISS DISTANCE X-ERROR FORMULA
HE ROUND UNDER QUASI-COMBAT CONDITIONS

M60A1 FCS APPROXIMATION

1500 Meters

$$X_T = 0 + .197X_W + 1.5X_M$$

2500 Meters

$$X_T = 0 + .614X_W + 2.5X_M$$

XM-1 FCS APPROXIMATION

1500 Meters

$$X_T = 0 + .197(X_W * .03) + 1.5X_M$$

2500 Meters

$$X_T = 0 + .614(X_W * .03) + 2.5X_M$$

NOTE: Residual Sensing Error for Crosswind Assumed = 3%

TABLE V
MISS DISTANCE Y-ERROR FORMULA
APFSDS ROUND UNDER QUASI-COMBAT CONDITIONS

M60A1 FCS APPROXIMATION

1500 Meters

$$Y_T = -4.179 + .006Y_V + (-.0025Y_D) + (-.0015Y_A) + .000Y_W + 1.473Y_M$$

2500 Meters

$$Y_T = -12.007 + .0144Y_V + (-.011Y_D) + (-.003Y_A) + .0015Y_W + 2.454Y_M$$

XM-1 FCS APPROXIMATION

1500 Meters

$$Y_T = -4.179 + .006Y_V + -.0025(Y_D * .01) + -.0015(Y_A * .02) + .000(Y_W * .03) + 1.473Y_M$$

2500 Meters

$$Y_T = -12.007 + .0144Y_V + -.011(Y_D * .01) + -.003(Y_A * .02) + .0015(Y_W * .03) + 2.454Y_M$$

TABLE VI
MISS DISTANCE Y-ERROR FORMULA
HE ROUND UNDER QUASI-COMBAT CONDITIONS

M60A1 FCS APPROXIMATION

1500 Meters

$$Y_T = -9.7766 + .0198Y_V + (-.0218Y_D) + (-.008Y_A) + .0033Y_W + 1.4738Y_M$$

2500 Meters

$$Y_T = -31.5553 + .0633Y_V + (-.1298Y_D) + (-.0353Y_A) + .0153Y_W + 2.4553Y_M$$

XM-1 FCS APPROXIMATION

1500 Meters

$$Y_T = -9.7766 + .0198Y_V + -.0218(Y_D * .01) + -.008(Y_A * .02) + .0033(Y_W * .03) + 1.4738Y_M$$

2500 Meters

$$Y_T = -31.5553 + .0633Y_V + -.1298(Y_D * .01) + -.0353(Y_A * .02) + .0153(Y_W * .03) + 2.4553Y_M$$

7. Summary

This section has presented a basic Miss Distance model that can be used to determine the impact point of each round fired at the target plane, either in single shot or burst mode of fire. Hit probabilities (P_H) have not been computed because miss distance is the basis for any later generation of P_H. Although the model as presented is simplistic in its formulation, since much of the laborious computation is aleviated by using published firing table data, the data calculations for insertion into the model variables are not so readily available. This is especially true when attempting to numerically define tube (barrel) bend, effect on the muzzle due to trunnion forces, and nonstandard muzzle velocity changes due to nonstandard propellant temperature and barrel bend. The examination of all of these input variables is beyond the scope of this study, however, the remaining portion of this chapter will be dedicated to an in depth study of barrel bend and its resultant impact demonstrated in Chapter IV, The Simulation Model.

B. BARREL BEND

1. Introduction

It has long been observed that if a strip of metal is heated and then allowed to cool in such a manner that one side cools more quickly than the other, the strip will bend toward the cooler side. A more accurate description of this process would be to say that the cooler side returns to its original temperature and shape more quickly.

This process also occurs in gun barrels. When the gun is fired, the barrel is heated. The barrel is exposed to the environment as it cools. If sides of the barrel are subjected to varying environmental conditions, e.g. wind or rain, the barrel will cool unevenly. This uneven cooling causes a temperature differential across the barrel. The magnitude of this temperature differential increases over time to a maximum value and then diminishes as ambient air temperature is approached, as illustrated in Figure 3.

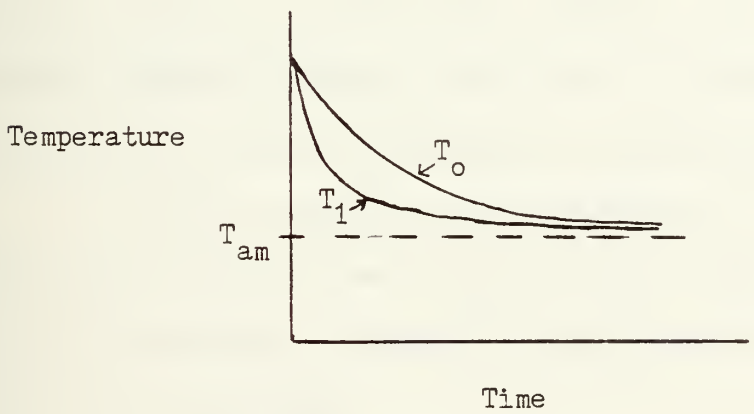

T_o = Temperature of hotter side
T_1 = Temperature of cooler side
T_{am} = Ambient air temperature

Figure 3: Time-Temperature Curves

To visualize the establishment of this differential more clearly, imagine that the temperature of all points of a gun barrel cross section has been raised to a particular value. Suppose further that a wind is blowing at point A in the figure below.

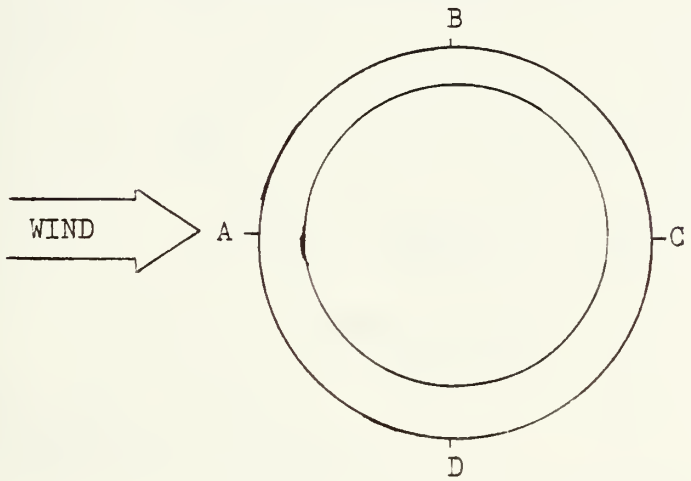

Figure 4: Gun Barrel Cross Section

Point A will receive the full benefit of the cooling effect of the wind and cool much more quickly than Point C. Moving from Point A toward Points B or D the temperature will rise until, in the vicinity of those points, it equals that of Point C. The temperature would then remain relatively constant until Point C is reached. A temperature curve for the surface would appear as shown in Figure 5.

Rain will cause a similar differential. In this case the hottest point would likely be near Point D and the coolest near Point B. The sun can also affect a temperature differential by adding temperature to the top of the barrel.

If there is a temperature differential along a gun barrel, the barrel will bend in the direction of the cooler side. If a round is fired through a bent gun barrel there will be an effect on the intended trajectory of the round. In order to approach the problem of

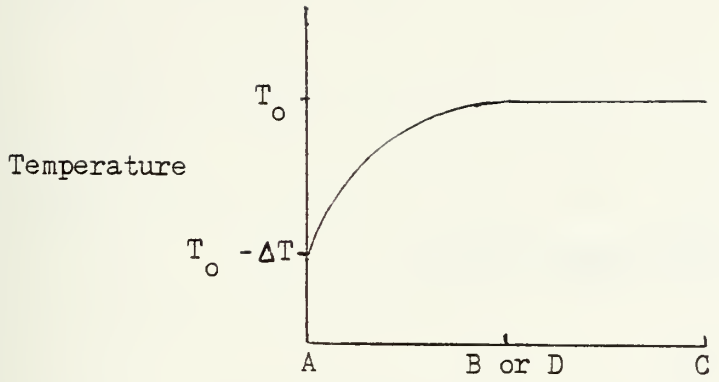

T_o = Temperature at Point C
$T_o - \Delta T$ = Temperature at Point A

Figure 5: Temperature Curve

determining the effects on accuracy, it is necessary to determine how hot the outer surface of the barrel gets, how much of a differential can occur across the barrel, and how much bend will result.

2. Approximation of Gun Barrel Surface Temperature (T_o)

The highest temperature on the outside surface of a gun barrel (T_o) is a complex function of many factors including barrel thickness, material, type of propellant, number of rounds fired, rate of fire, etc. T_o is also unique for each different type of gun and will vary slightly between similar guns. Heat and temperature curves for many guns have been developed. Since the 75mm cannon has been selected for this analysis, T_o must be approximated for this particular barrel.

Figure 6 shows temperature curves developed for temperature as a function of rounds fired at maximum rate of the ARES 75mm cannon. [10]

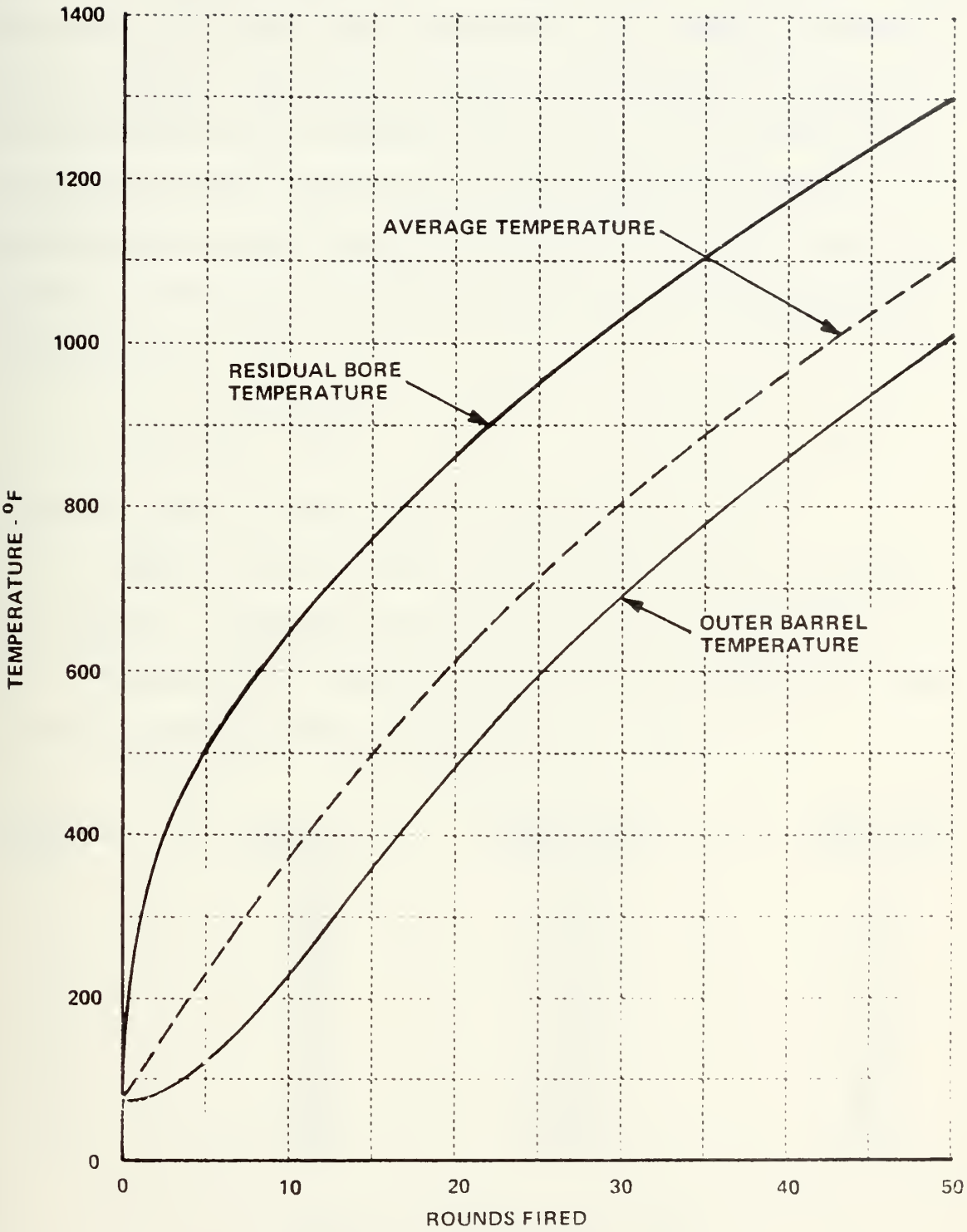

Figure 6: ARES Temperature Curves

The area of concern is near the muzzle end of the barrel and can be assumed to be representative of the temperature along the forward end of the barrel. The outer barrel temperature is the quantity of interest for the analysis. The curve in Figure 6 was developed by a computer program and the exact mathematical basis could not be provided. The shape of the curve indicates that a linear approximation should be very satisfactory for estimating T_o in the region of interest. Linear regression on data points of the curve results in the following approximation for T_o.

$$T_o = 64.55 + 19.8X \qquad (15)$$

where X = number of rounds fired at maximum rate.

Figure 7 shows the data from the Figure 6 curve in the first two columns. T_o estimated from (15) is shown in the third column. In the last column is T_o estimated by substituting the ambient air temperature (T_{am}) for the value of 64.55 in (15).

Rounds Fired	Figure 6	Regression (with 64.55)	Regression (with T_{am})
0	75	64.55	75
5	125	163.00	174
10	225	262.00	273
15	360	362.00	372
20	485	460.00	471
25	595	559.00	570
30	690	658.00	669
35	780	757.00	768
40	860	856.00	867
45	940	956.00	966
50	1010	1055.00	1065

Figure 7: Approximation of T_o

The original regression and the regression with the substitution of T_{am} are adequate approximations, especially in the range of 10 to 45 rounds. This approximation is used to estimate the temperature differential in the development of subsequent relationships. Trials with differing ambient temperatures show that while T_o varies, as would be expected, the temperature differential remains the same. Also the use of the approximation with T_{am} included simplifies some later calculations. The coefficient of determination (R^2) of the regression including T_{am} is greater than .99. Therefore, for the balance of the computations made, T_o will be approximated by the following:

$$T_o = T_{am} + 19.8X \qquad (16)$$

where

T_{am} = ambient air temperature

X = number of rounds fired at maximum rate

3. Approximating the Temperature Differential

A formula for the effect of wind or rain will take the general form:

$$\Delta T = C(T_o - T_{am}) \qquad 0 < C < 1 \qquad (17)$$

where

ΔT = the temperature differential

C = cooling factor

T_o = temperature of the hottest part of barrel surface

T_{am} = ambient air temperature

In other words, the temperature differential that will develop across the barrel will be some fraction of the difference between the hottest point of the barrel and the ambient air temperature. The cooling factor, C, will be the value attainable by some function of the intensity of wind or rain, time and other factors. The search for functions representing the cooling effect of wind or rain was most unsuccessful. Neither functions nor sufficient data to permit derivation could be found. The search was then redirected to find the maximum expected value for C. A value of C could not be determined for rain. However, determination of the maximum expected value of C is possible for wind cooling.

By Newton's Law of Cooling:

$$Q = h A \Delta T \tag{18}$$

where

Q = heat transfer rate

h = heat transfer coefficient

ΔT = temperature differential between the surface and ambient air temperature

We can reasonably assume the heat transfer rate (Q) on the surface of a gun barrel to be constant. The definition of the temperature differential is:

$$\Delta T = (T - T_{am}) \tag{19}$$

We can combine (18) and (19) under the above assumption to give:

$$(T - T_{am})\, h = \frac{Q}{A} \tag{20}$$

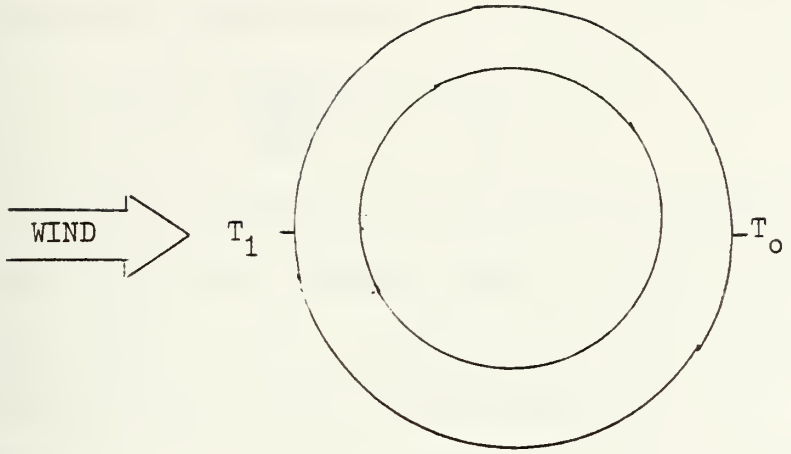

Figure 8: Gun Barrel Cross Section

Since the temperature differential between T_1 and T_{am} in Figure 8 is different from the temperature differential between T_o and T_{am} and since both quantities equal a constant value, then the heat transfer coefficient (h) must vary and:

$$(T_1 - T_{am})\ h_{max} = \frac{Q}{A} \tag{21}$$

$$(T_o - T_{am})\ h_{min} = \frac{Q}{A} \tag{22}$$

From (21) and (22):

$$(T_1 - T_{am})\ h_{max} = (T_o - T_{am})\ h_{min} \tag{23}$$

Since, by definition:

$$T_1 = T_o - \Delta T \tag{24}$$

(23) can be reduced to:

$$T_o - T_{am} = \frac{h_{max}}{h_{min}}\ (T_o - T_{am} - \Delta T) \tag{25}$$

Solving (25) for ΔT yields:

$$\Delta T = (1 - \frac{h_{min}}{h_{max}}) (T_o - T_{am}) \qquad (26)$$

The ratio of h_{min} and h_{max} can be determined from the work of Giedt. [11] With a Reynolds number of 70,800 and 4.25 inch diameter gun barrel [12] the value of the ratio is found to be 100/250 or 0.4. Thus, the wind cooling factor for the ARES cannon is 0.6. This corresponds roughly to a 20 mph wind. Formula (26) for the temperature differential may now be reduced to:

$$\Delta T_w = 0.6(T_o - T_{am}) \qquad (27)$$

where

ΔT_w = the maximum expected temperature differential across the barrel of the ARES cannon caused by wind cooling

T_o = temperature of hottest point of barrel surface

T_{am} = ambient air temperature

With the above expression for the maximum expected temperature differential, it is possible to calculate the magnitude of bend that can occur in the ARES cannon as a result of wind cooling. This requires a formula for bend which is developed in the following section. Factually, this is the only bend that can be calculated with some confidence. It is desirable, however, to have some feel for the range of bend that can occur because of varying conditions of rain, as well as wind. Therefore, a parametric analysis was performed with assumed values for other conditions. It must be emphasized that the value of 0.6 for wind cooling is the only value that has been derived. This value will be used in

the study as the cooling factor for "hard wind." Other values are based solely on the subjective judgement of the author and others consulted.[1] For the purpose of the parametric study the following cooling factor values will be assumed for the weather conditions indicated:

Hard wind - 0.6 (approximately 20 mph)
Light wind - 0.2 (approximately 5 mph)
Hard rain - 0.8 (approximately 0.5 inches per hour)
Light rain - 0.6 (approximately 0.05 inches per hour)

4. Derivation of the Barrel Bend Formula

From the definition of curvature:

$$K = \frac{d\theta}{dx} \tag{28}$$

where

K = curvature

θ = local deviation angle

x = desired axis

it can be seen that

$$\theta = \int_0^x K\, dx \tag{29}$$

The task is to find an expression for K. Hooke's Law for isotropic materials 13 states:

$$\epsilon_x = \frac{\sigma_x}{E} + \alpha(T - T_a) \tag{30}$$

where

ϵ_x = strain in direction of length

---

[1] R. E. Newton and M. D. Kelleher of the Department of Mechanical Engineering, Naval Postgraduate School provided assistance here and in other parts of the derivation.

σ_x = normal stress on a barrel cross section

E = modulus of elasticity

α = coefficient of thermal expansion

T = temperature of a point

T_a = average temperature

Multiplying (30) by y da gives

$$\int \epsilon_x \, y \, da = \frac{1}{E} \int \sigma_x \, y \, da + \alpha \int (T - T_a) \, y \, da \qquad (31)$$

The bending moment does not change as a result of temperature strains and may be considered zero for this purpose. Therefore,

$$\frac{1}{E} \int \sigma_x \, y \, da = 0 \qquad (32)$$

and (31) may be reduced to:

$$\int \epsilon_x \, y \, da = \alpha \int (T - T_a) \, y \, da \qquad (33)$$

Since by Popov [13]

$$\epsilon_x = K \, y \qquad (34)$$

(33) becomes

$$K \int y^2 \, da = \alpha \int (T - T_a) \, y \, da \qquad (35)$$

By definition:

$$y^2 \, da = I_z = \frac{\pi}{4} (r_o^4 - r_i^4) \qquad (36)$$

where

r_o = radius of outer surface

r_i = radius of inner surface

Substitution of (36) into (35) yields:

$$K = \frac{\alpha}{I_z} \int (T - T_a)\, y\, da \qquad (37)$$

It is necessary to make certain statements and assumptions before proceeding with the derivation. If a gun barrel cross section is experiencing uneven cooling, a temperature differential will develop. As illustrated in Figure 9, the surface temperature at $\phi = 0$ will be equal to $T_o - \Delta T$. The temperature will rise as the angle ϕ increases and reach a maximum value near $\phi = \frac{\pi}{2}$. The temperature will remain constant until $\phi = \pi$. Assume the point of equal temperature occurs where $\phi = \frac{\pi}{2}$.

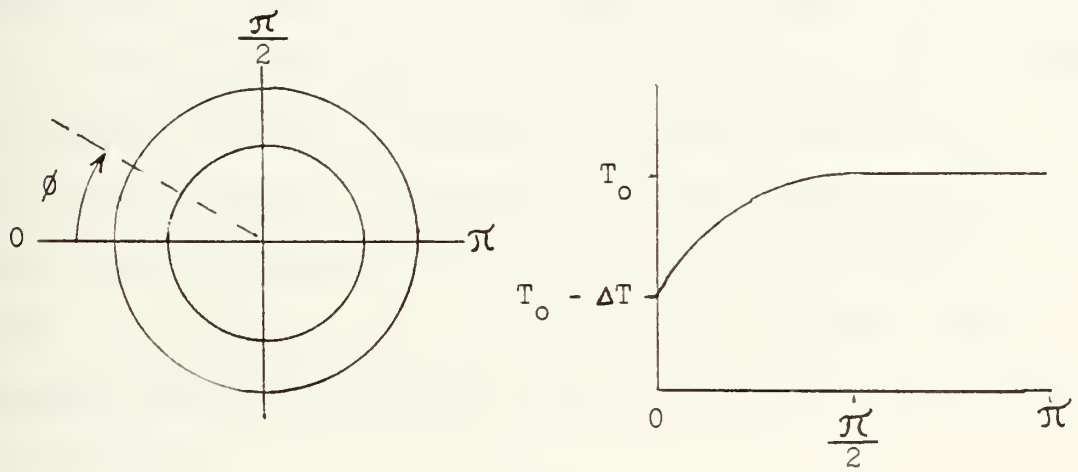

Figure 9: Cross Section Temperature

Then the surface temperature (T_s) can be expressed by the following:

$$T_s = T_o - \Delta T \cos \phi \qquad \phi \leq 0 < \frac{\pi}{2} \qquad (38)$$

$$T_s = T_o \qquad \phi \geq \frac{\pi}{2} \qquad (39)$$

The temperature distribution in a hollow cylinder is known by Krieth [14] to be:

$$T = T_i - \frac{T_i - T_s}{\ln\left(\frac{r_o}{r_i}\right)} \ln\left(\frac{r}{r_i}\right) \tag{40}$$

Finally, it can be shown that relatively little bending occurs at the breech end of the gun barrel. This fact is due to the increased wall thickness and because of the various supports that are found in this portion of the barrel. The amount of bend in this portion is assumed to be insignificant. Therefore, the portion of the barrel to be considered is the portion which extends forward of the supported section. This portion will be referred to as the unsupported length. It is also noted that in the unsupported length of the barrel, the inner and outer radii are generally constant for most guns, including the ARES cannon. If the radii are not constant in this region, then an expression must be inserted in the relationships which define the radius as a function of length. Inner and outer radii will be considered constant through the unsupported length of the barrel for the remainder of the derivation. From (37) let:

$$P = \int (T - T_a)\, y \, da \tag{41}$$

in cylindrical coordinates

$$P = \int_0^{\pi} \int_{r_i}^{r_o} (T - T_a)\, y \, r \, dr \, d\phi \tag{42}$$

Substituting the definition $y = r \cos \phi$ and (40) into (42) yields:

$$P = \int_0^{\pi}\int_{r_i}^{r_o} \left[T_i - (T_i - T_s) \frac{\ln\left(\frac{r}{r_i}\right)}{\ln\left(\frac{r_o}{r_i}\right)} - T_a\right] r^2 \cos \phi \, dr \, d\phi \qquad (43)$$

Integration with respect to r gives:

$$P = \int_0^{\pi} \left\{(T_i - T_a)(r_o^3 - r_i^3) - (T_i - T_s) \frac{r_i^3}{\ln\left(\frac{r_o}{r_i}\right)} \left[\frac{1}{3}\left(\frac{r_o}{r_i}\right)^3 \ln\left(\frac{r_o}{r_i}\right) - \frac{1}{9}\left(\frac{r_o}{r_i}\right)^3 + \frac{1}{9}\right]\right\} \cos \phi \, d\phi \qquad (44)$$

Let:

$$\tau = (T_i - T_a)(r_o^3 - r_i^3) \qquad (45)$$

$$\lambda = \frac{r_i^3}{\ln\left(\frac{r_o}{r_i}\right)} \left[\frac{1}{3}\left(\frac{r_o}{r_i}\right)^3 \ln\left(\frac{r_o}{r_i}\right) - \frac{1}{9}\left(\frac{r_o}{r_i}\right)^3 + \frac{1}{9}\right] \qquad (46)$$

Substituting (45) and (46) into (44) gives

$$P = \int_0^{\pi} \tau \cos \phi \, d\phi - \lambda \int_0^{\pi} (T_i - T_s) \cos \phi \, d\phi \qquad (47)$$

From the definitions of T_s given by (38) and (39), (47) may be expanded to:

$$P = \int_0^{\pi} \tau \cos \phi \, d\phi - \lambda \int_0^{\pi} T_i \cos \phi \, d\phi + \lambda \int_0^{\pi} (T_o - \Delta T \cos \phi) \cos \phi \, d\phi + \lambda \int_{\frac{\pi}{2}}^{\pi} T_o \cos \phi \, d\phi \qquad (48)$$

Integration with respect to ϕ gives

$$P = \frac{\lambda \pi \Delta T}{4} \tag{49}$$

(49) can now be replaced in (37) to give

$$K = \frac{\alpha}{I_z} \left(\frac{\pi \lambda \Delta T}{4} \right) \tag{50}$$

which by (36) can be further reduced to

$$K = \frac{\lambda \alpha \Delta T}{r_o^4 - r_i^4} \tag{51}$$

(51) can now be substituted into (29) to give:

$$\theta = \int_0^x \frac{\lambda \alpha \Delta T}{r_o^4 - r_i^4} dx \tag{52}$$

The result of integration of (52) will be in radians. Since it is desired to have the result in mils, the right side of (52) is multiplied by the conversion factor of 1018.6 mils per radian. Since the terms in (52) are constants, including the mil conversion factor, let a bending constant (β) be defined where:

$$\beta = \frac{(1018.6)(\lambda)(\alpha)}{r_o^4 - r_i^4} \tag{53}$$

Then (52) may be reduced to

$$\theta = \int_0^x \beta \Delta T \, dx \tag{54}$$

Since the terms to be integrated are constant along the unsupported length of the barrel, the result of integration will give the amount of bend at the muzzle in mils and will be:

$$\theta = L \beta \Delta T \tag{55}$$

where:

L = length of unsupported barrel in millimeters

β = bending constant defined by (53)

ΔT = temperature differential defined by (26)

5. Calculating Bend for the ARES Cannon

Relationships derived in the foregoing sections permit calculation of the maximum expected bend for the ARES gun as a result of wind cooling. For the ARES cannon [12]:

$r_o = 54$ mm

$r_i = 37.5$ mm

$L = 1700$ mm

$\alpha = 6 \times 10^{-6}$

Inserting the values above into (46), (53) and (55) gives the final result:

$$\theta = 0.0327\ \Delta T \tag{56}$$

(27) shows that for wind cooling:

$$\Delta T = 0.6(T_o - T_{am}) \tag{57}$$

By (16), T_o may be approximated by:

$$T_o = T_{am} + 19.8X \tag{58}$$

Substituting (58) into (57) and solving for ΔT, and then substituting the result into (56) yields

$$\theta = 0.39X \tag{59}$$

where X is the number of rounds fired at maximum rate.

This leads to the conclusion that the maximum expected bend at the muzzle of the ARES cannon as a result of wind cooling can be approximated by (59). Recall that (58) is a good approximation especially in the range of 10 to 45 rounds. A graphic representation of (59) is given in Figure 10.

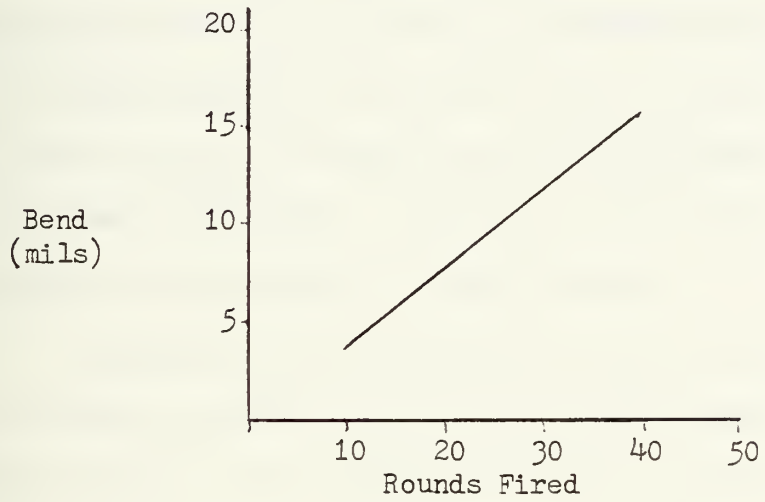

Figure 10: Wind Generated Bend (ARES Gun)

As can be seen from Figure 10, the amount of bend that can be caused by wind cooling can be very significant. These results are markedly less severe than has been estimated by other researchers. Rain can cause even more severe bend.

It must be recognized that it is extremely unlikely that a tank crew would fire 45 rounds at maximum rate. However, given the capability, it is not unlikely that 10 rounds would be fired. Several shorter bursts fired in rapid succession will generate nearly the same amount of temperature and the resultant bend. An additional question must now be addressed. Given that the barrel is bent, how much deflection to the projectile will result?

6. Straightening Forces

If a round is fired through a bent barrel, the projectile may exert a straightening force on the barrel as it travels down the bore. If there is a degree of straightening, the amount of actual deflection will be less than the full amount of bend. Any amount of straightening that may occur must be paid for by an accompanying loss in muzzle velocity. A loss in muzzle velocity will cause a range error. The round will not travel as far as intended and will pass through the target plane at a point lower than planned. There is no easy way to determine the net deflection and any change in muzzle velocity.

The results of the parametric analysis conducted in Chapter IV indicate that the amount of bend will seldom exceed one degree. This amount of bend is very significant as far as accuracy is concerned, but relatively insignificant with respect to the forces involved. It is assumed that for the small angles encountered, the amount of straigntening will be negligible. The full amount of bend will then be considered as deflection of the round from its intended trajectory and there will be no resulting loss of muzzle velocity.

7. Time Dependency

Figure 3 indicates the magnitude of bend varied over time. The angle will increase to a maximum magnitude and then diminish as each side of the barrel approaches the ambient air temperature. The maximum expected bend from wind cooling will occur approximately 15 minutes after completion of firing. A hard rain will cause the maximum bend to occur in a much shorter time. This time cannot be accurately calculated due to the lack of adequate data. It is assumed in this study that the maximum magnitude of rain induced bend will occur approximately five

minutes after completion of firing. The time required for the maximum value of bend to occur will vary between types of guns and with varying amounts of wind or rain.

8. Avoiding Barrel Bend

It is a fact that gun barrels bend. The foregoing sections have demonstrated that the amount of bend can be very significant and can cause a sizable miss distance at the target plane. This effect can be avoided by two general methods. The amount of bend occuring at any point in time can be compensated for or barrel bend can be eliminated altogether.

Methods of compensating for barrel bend include:

a. Temperature sensing of points of the barrel to determine temperature differential, calculating the amount of bend, and adjusting the lay of the gun accordingly.

b. Direct measurement of bend through optic or other sensing devices and compensating as above.

There are several ways of avoiding barrel bend altogether. These basically involve the prevention of uneven cooling. Two methods are:

a. Installation of a cooling system which insures even cooling of all parts of the barrel.

b. Shield the barrel from the causes of uneven cooling (i.e. the environment) with a protective shroud or coating. This alternative is reportedly being developed by certain allied nations.

9. Summary

Gun barrels are heated during firing. Rapid fire guns in particular can generate rather high barrel temperature, although high barrel

surface temperatures are certainly common in guns with slower rates of fire when a large number of rounds are fired. The gun barrel is exposed to varying environmental effects as it cools after completion of firing. Wind or rain on the surface of the barrel during the cooling period will cause the barrel to cool unevenly, resulting in a bend of the barrel. This occurrence can significantly affect the trajectory of rounds fired while the barrel is bent causing a sizable miss distance at the plane of the target. The effects of barrel bend can be compensated for or barrel bend can be avoided altogether. Weapons under development should be required to incorporate methods of avoiding barrel bend or its effects and modifications to existing weapons should be investigated.

IV. THE SIMULATION MODEL

A. MODEL DESCRIPTION AND ASSUMPTIONS

To employ the miss distance and barrel bend models under Quasi-Combat conditions, a computerized parametric analysis was conducted. It was performed in order to evaluate the automatic gun concept under various weather conditions, fire control system configurations and projectile types. When required, the analysis used specific characteristics of the ARES 75mm automatic gun.

To evaluate the effects of weather on gun performance (and in particular the effects of barrel bend) a weather case matrix was developed containing variable inputs of air temperature, direct left to right crosswind, rainfall, vapor pressure, and cooling factors which were developed in Chapter III, Section B. The weather condition for any trial is considered to occur at 1000 feet above sea level. Air temperature varies from the standard of 60° Fahrenheit to either 100°F or 0°F. Rangewind has not been simulated but direct left to right crosswind effects can be determined by using a light wind of approximately 7 mph and a hard wind of approximately 20 mph. The effects of rain are simulated by considering a light rain condition of 0.05 inches per hour and a hard rain condition of 0.5 inches per hour. Vapor pressure values (in inches of mercury) are a function of the air temperature and relative humidity and are used in the model to compute air density. For the "no rain" condition, the relative humidity was assumed to be 80%. If a rain condition existed, then the relative humidity was set at 100%. By

referring to vapor pressure tables in Smithsonian Institute [8], specific values were then generated for vapor pressure considering the air temperature and relative humidity.

Each test weather case was conducted in conjunction with a selected projectile (HE or APFSDS) and range to engage the target. Once all selected weather cases had been simulated for a specific test projectile and range, then all weather cases were repeated with the next test projectile and range.

After generating the basic situation by establishing a weather case, the test projectile and range of the target, the only element remaining in the model scenario is the trial itself. The basis for the structure of a trial is an attempt to structure a somewhat realistic combat scenario for a rapid fire gun mounted on a tank.

The trial represents perhaps an hour in combat for a tank. It is envisioned that during this period a tank would have several short engagements. During each engagement the tank would fire several short bursts of either three or five rounds at the target. Between engagements the tank could remain in position or move to a new location. For this study three engagements per trial and four bursts per engagement were used. (See Figure 11)

The time between engagements is established as the time required for the maximum expected bend to occur. This time will vary according to the environmental conditions being experienced by the barrel. Maximum bend can occur in as little as five minutes under a hard rain condition or longer for lessor weather conditions. The length of any engagement is less than one minute. An engagement is thus considered a sequence of four short bursts fired in rapid succession at maximum rate of fire with minimal time between bursts.

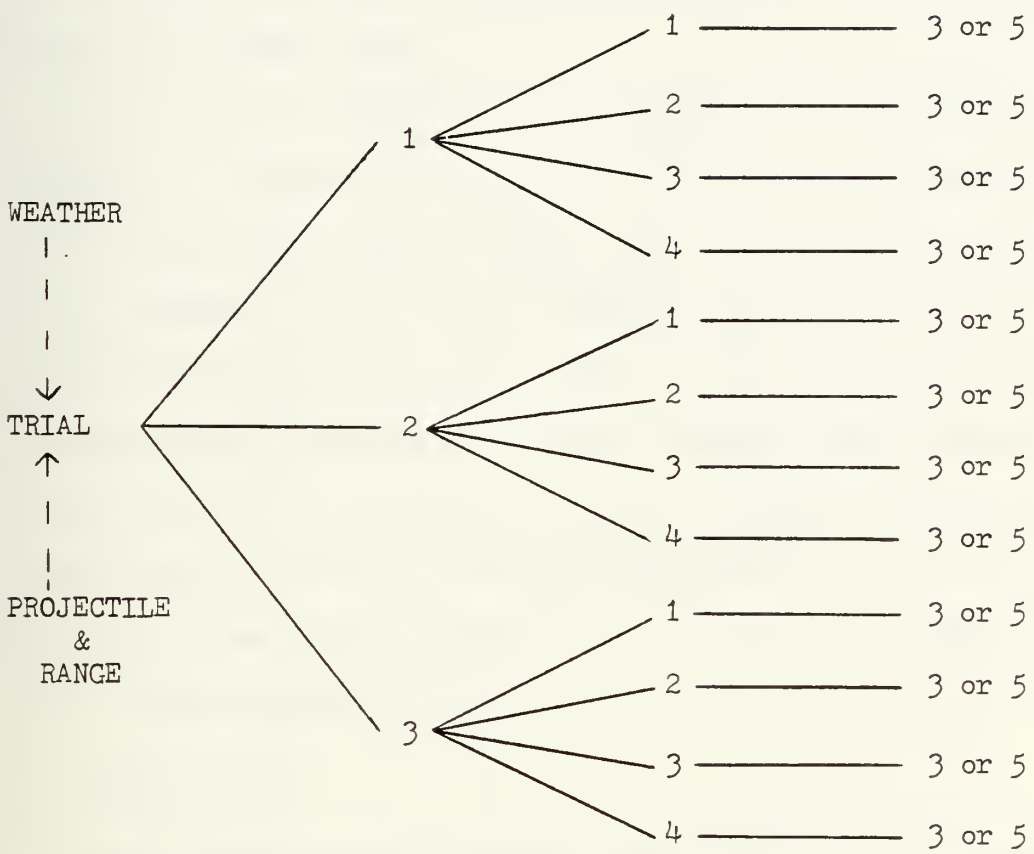

Figure 11: Trial Representation

The gun barrel surface heat generated in an engagement will nearly approach that generated by firing a single burst of the same number of rounds. The program structure calls for the gun barrel surface to be at ambient air temperature for initialization of each trial. Therefore, there is no barrel bend for the first engagement. The number of rounds fired during the first engagement is used to calculate the resulting gun barrel surface temperature. Bend at the muzzle in mils is then calculated depending on the weather case selected. Since wind is

assumed to be blowing left to right and perpendicular to the barrel, bend in the X axis is always to the left. Rain is assumed to be falling on top of the barrel. Rain induced bend is calculated in exactly the same manner with only the cooling factor changed. Thus, bend in the Y direction is always upward.

For the third engagement of a trial one final factor must be considered. The number of rounds in the second engagement generate barrel surface temperature which is added to the temperature remaining from the first engagement. Thus the bend generated between the second and third engagements will be more severe. After consideration of the time span and the foregoing assumptions, it was determined that a standard cumulative heat value of 0.5 should be used. Therefore, the barrel surface temperature at the end of the second engagement is based on the number of rounds in the second engagement plus 0.5 times the number of rounds in the first engagement.

B. MODEL RESULTS

Output tables from the computer trials are given in Appendix B. In order to simulate the two systems, the standard deviations developed in Chapter III, Section 5 were used. The basic differences in the two system approximations were due primarily to the higher sophistication of the XM-1 fire control employing sensor devices and the laser rangefinder.

Table VII is a sample of the computer output to demonstrate the model's capabilities. One trial is presented and the applicable general trial situation is listed in the page heading. In this case, the trial situation occurs using the ARPA HE round and engaging a target at a range of 2500 meters under weather conditions consisting of an air

TABLE VII
COMPUTER OUTPUT SAMPLE

FIRING TABLE --- 8CLND: HIGH EXPLOSIVE RANGE: 2500 MTRS
WEATHER CASE --- AIR TEMP(F): 0, HARD WIND, NO RAIN
RCLNDS PER BURST 3
ADDITIVE HEAT EFFECT FACTOR--0.50

ENG. NO.	BURST NO.	ROUND NO.	FIXED BIAS (MILS) AZIMUTH BEND	AZIMUTH TOTAL	ELEVATION BEND	ELEVATION TOTAL	RANDOM ERROR (MILS) AZIMUTH	ELEVATION	TOTAL ERROR (METERS) AZIMUTH	ELEVATION
1	1	1	0.0	3.07	0.0	0.71	-0.60	-6.99	6.17	-15.44
1	1	2	0.0	3.07	0.0	0.71	0.06	-7.50	7.83	-16.68
1	1	3	0.0	3.07	0.0	0.71	-0.28	-6.92	6.97	-15.27
1	2	1	0.0	3.07	0.0	0.71	0.83	-6.86	9.76	-15.11
1	2	2	0.0	3.07	0.0	0.71	0.28	-7.30	8.37	-16.18
1	2	3	0.0	3.07	0.0	0.71	-0.21	-7.79	7.14	-17.40
1	3	1	0.0	3.07	0.0	0.71	-0.02	-7.41	7.63	-16.46
1	3	2	0.0	3.07	0.0	0.71	0.96	-7.48	10.06	-16.63
1	3	3	0.0	3.07	0.0	0.71	-0.14	-7.14	7.33	-15.81
1	4	1	0.0	3.07	0.0	0.71	0.12	-6.53	7.99	-14.31
1	4	2	0.0	3.07	0.0	0.71	0.04	-7.15	7.78	-15.83
1	4	3	0.0	3.07	0.0	0.71	0.27	-6.88	8.60	-15.15
2	1	1	4.67	7.74	0.0	0.71	-1.20	-7.86	16.34	-17.56
2	1	2	4.67	7.74	0.0	0.71	-0.86	-8.00	17.19	-17.51
2	1	3	4.67	7.74	0.0	0.71	-1.03	-7.36	16.79	-16.34
2	2	1	4.67	7.74	0.0	0.71	-0.81	-7.61	17.22	-16.56
2	2	2	4.67	7.74	0.0	0.71	-0.57	-7.19	17.92	-15.92
2	2	3	4.67	7.74	0.0	0.71	-1.12	-8.26	16.54	-18.55
2	3	1	4.67	7.74	0.0	0.71	-1.25	-7.03	16.24	-15.52
2	3	2	4.67	7.74	0.0	0.71	-0.65	-7.68	17.73	-17.13
2	3	3	4.67	7.74	0.0	0.71	-0.99	-7.21	16.87	-15.97
2	4	1	4.67	7.74	0.0	0.71	0.17	-8.15	19.78	-18.29
2	4	2	4.67	7.74	0.0	0.71	-0.98	-7.99	16.90	-17.90
2	4	3	4.67	7.74	0.0	0.71	-1.21	-7.52	16.33	-16.74
3	1	1	7.01	10.08	0.0	0.71	-0.97	-1.80	22.76	-2.68
3	1	2	7.01	10.08	0.0	0.71	-1.64	-2.18	21.09	-3.63
3	1	3	7.01	10.08	0.0	0.71	-0.68	-1.85	23.50	-2.81
3	2	1	7.01	10.08	0.0	0.71	-1.73	-2.20	20.86	-3.68
3	2	2	7.01	10.08	0.0	0.71	-1.63	-3.06	21.11	-5.77
3	2	3	7.01	10.08	0.0	0.71	-1.06	-1.54	22.53	-2.04
3	3	1	7.01	10.08	0.0	0.71	-1.87	-1.29	20.51	-1.44
3	3	2	7.01	10.08	0.0	0.71	-1.72	-1.75	20.90	-2.55
3	3	3	7.01	10.08	0.0	0.71	-1.68	-1.56	20.99	-2.19
3	4	1	7.01	10.08	0.0	0.71	-1.00	-1.72	22.69	-2.49
3	4	2	7.01	10.08	0.0	0.71	-1.98	-1.78	20.25	-2.63
3	4	3	7.01	10.08	0.0	0.71	-1.43	-1.59	21.62	-2.16

temperature of $0^{o}F$ with a hard crosswind of approximately 20 mph and no rain. For reader clarity, some of the column headings presented for the trial results are defined below.

1. FIXED BIAS (MILS) is the deviation in mils at the muzzle of the fixed biases of the weapon system for any round fired.
2. BEND is the amount of barrel bend on the muzzle expressed in mils under the scenario conditions.
3. TOTAL is the total fixed bias in mils at the muzzle under the scenario conditions, including barrel bend.
4. RANDOM ERROR (MILS) is the effect of Round-to-Round, Burst-to-Burst, and Occasion-to-Occasion errors on the projectile expressed in mils at the muzzle. These error values were generated using the error classifications and computation of standard deviations as presented in Chapter III and then applying the error values by use of a standard normal random number generator routine. After completion of the computer runs, a potential problem with the random number routine was discovered. Therefore, this routine should be completely verified before using the model in a production mode.
5. AZIMUTH refers to the X axis of the target plane.
6. ELEVATION refers to the Y axis of the target plane.
7. TOTAL ERROR (METERS) is the miss distance in meters of the projectile at the target due to the contribution of all the fixed biases, variable biases and random errors.

As presented in the body of the table, the trial consists of three engagements, each less than one minute in duration, four short bursts fired in rapid succession, and three rounds per burst. For Engagement 1, gun barrel surface temperature is at ambient air temperature and

therefore, barrel bend equals 0.0. The factor affecting azimuth fixed bias in this situation is the hard left to right crosswind resulting in 3.07 mils bias at the muzzle. Factors which affect the elevation fixed bias are the temperature differential from standard of 60°F to 0°F and the air density change from standard due to the cold temperature. The random error totals at the muzzle are the sum of the Round-to-Round, Burst-to-Burst, and Occasion-to-Occasion errors after use of the standard normal random number generator routine. Notice that the Occasion-to-Occasion errors do not vary within the engagement; the Burst-to-Burst errors vary only between bursts within the engagement; and the Round-to-Round errors vary with each round fired. Finally, the total miss distance in meters at the target is expressed for each round in azimuth and elevation by considering both the system fixed bias and the random errors.

In Engagement 2, the factors affecting the fixed biases of the weapon system remain the same; however, now barrel bend is introduced as an additional fixed bias. The 12 rounds fired in the first engagement affect the gun barrel surface temperature and the time between the two engagements, defined as the time for maximum bend to occur, has allowed the cool hard wind to decrease the outer surface temperature with the resultant bend. The new fixed bias in azimuth becomes 4.67 and 7.74 for barrel bend and total fixed bias respectively.

In Engagement 3, barrel bend is the only fixed bias change. The number of rounds fired in the first engagement (12) and the rounds fired in the second engagement (12) are cumulatively addressed to determine the resulting outer surface temperature of the barrel. Although the same crosswind velocity is encountered, the effect of the higher outer

surface barrel temperature is a more severe barrel bend condition of 7.01‰. This results in a total fixed bias in azimuth of 10.08‰.

There were a total of 480 trial runs conducted in the simulation model (240 trials with M60 fire control system approximation and 240 trials with XM-1 fire control system approximation). The results of the selected trial runs included in Appendix B adequately illustrate the effects of barrel bend in automatic cannon firing and validate the models developed. If additional trial run output is required for analysis, they are available upon request from the authors.

V. SUMMARY AND CONCLUSIONS

Conventional warfare is a realistic possibility in the turbulent world of today. In a conventional war the tank will be a principle threat to allied forces and the primary counter to that threat. If the tank is to be effective in the antitank role, in view of the numerical superiority of opposing forces, there must be a capability of accurate fire well above that demonstrated in the Arab-Israeli War. Every attempt must be made to eliminate or minimize factors that affect the accuracy of tank gun fire.

This paper has presented an analysis of factors affecting miss distance and proposes that barrel bend has been overlooked as a major contributor to inaccurate fire. A formula was derived for computing the expected value of bend which can realistically be experienced in varying weather conditions. A model was presented which computes barrel bend and other errors giving the resulting miss distance at the target.

Analysis of the model output as presented in Appendix B provides the following conclusions.

1. Miss distance at the target is less with the XM-1 fire control system approximation than the M60 fire control system approximation due primarily to the capability of sensors for air temperature, wind, and air density as well as the laser rangefinder. This minimizes significantly the system fixed biases other than barrel bend. The M60 fire control system is particularly susceptible to error induced by crosswinds. The fixed bias unaccounted for by the XM-1 fire control was generally less than 0.1 mil. This error is relatively insignificant when compared to the error from barrel bend.

2. The APFSDS round is more accurate than the HE round as a result of the projectile's design characteristics, e.g. significantly higher muzzle velocity.

3. Rapid fire cannons will be particularly susceptible to barrel bend due to the high barrel surface temperatures resulting from burst fire.

4. Shorter bursts generate less heat and less barrel bend.

5. Cooler air temperatures increase the magnitude of barrel bend.

6. Shorter barrels and barrels with thicker walls will be less susceptible to bend.

7. Barrel bend occurs during the cooling period after an engagement. The magnitude of bend that can occur depends on the number of rounds fired during the engagement, weather, and gun characteristics. An engagement of 20 rounds, i.e. four bursts of five rounds fired in rapid succession, is shown to generate sufficient barrel temperature to cause as much as a 12 mil error under wind cooling or nearly 16 mils under rain cooling. This bend becomes a fixed bias affecting the accuracy of rounds fired in the next engagement.

8. In a series of engagements there will be an additive effect of barrel bend if sufficient time is not allowed for the bend to diminish. Thus the third engagement can be affected by the bend induced by the second engagement plus a portion of bend induced by the first engagement.

There are ways to compensate for barrel bend and ways to eliminate bend altogether. If compensation for barrel bend is to be achieved, then extensive research is required to:

1. Develop functions for outside barrel temperature.

2. Develop functions for the cooling factor of varying amounts of wind and rain.

3. Determine whether the barrel does or does not straighten by any significant amount during firing, and if straightening does occur, at what cost in muzzle velocity from standard.

4. Develop systems for sensing or direct measurement of barrel bend. On the other hand, if elimination of bend is desired, then research is required to develop a system which will insure even cooling. Shielding of the barrel from the elements of wind and rain by a protective shroud or coating seems to be the most viable alternative. This method is reportedly being investigated by West Germany and Great Britain.

In addition to further analysis of barrel bend, the testing of the models in the parametric analysis presented further areas for extended study.

1. Examination of the effects of trunnion forces on muzzle position to provide additional input into the miss distance model.

2. Determine the change in muzzle velocity from standard as a result of changes in propellant temperature due to heat transfer from the barrel temperature.

3. Determine the change in muzzle velocity from standard as a result of the barrel bend condition and projectile straightening upon firing.

This paper has particularly addressed the bend that can occur in rapid fire cannons because of the higher barrel surface temperatures that are likely to be experienced as these weapons are developed. The paper also concentrates on tank guns due to the stringent requirement for accuracy when firing at point targets with direct fire. However, bend occurs in weapons with lower rates of fire, including current tank guns and conventional artillery weapons.

It is concluded that barrel bend can significantly decrease the accuracy of gunfire. The magnitude of the resultant error at the target

can no longer be tolerated if the tank is to remain the principal anti-tank weapon on the modern battlefield. Weapons under development, particularly rapid fire tank guns, should be required to demonstrate the capability of avoiding or at least compensating for barrel bend.

APPENDIX A

ASSUMED FIRING TABLE AND EFFECTS DATA

The firing table data presented in Appendix A is not the exact data being used for the ARPA 75mm cannon and selected ammunition, but is merely an assumed approximation for use in the models generated in this paper. For more effective evaluation of this developmental system, the exact firing table data should be used.

ASSUMED FIRING TABLE AND EFFECTS DATA
ARPA APFSDS - 75MM

RANGE (Meters)	SUPERELEVATION (MILS)	DRIFT (MILS)
1500	2.8370	0
2500	4.8929	0

NON STANDARD - STANDARD

RANGE (M)	CHANGE IN HEIGHT (M)	CHANGE IN DRIFT (M)	NON-STD CONDITION
1500	.0060	.0000	1 m/s Velocity
	-.0025	.0000	1 Pct Density
	-.0015	.0000	1 Pct Air Temp
	.0000	.0000	1 m/s Rangewind
	.0000	.0358	1 m/s Crosswind
	1.4730	.0000	1 MIL Elevation
2500	.0144	.0000	1 m/s Velocity
	-.0110	.0000	1 Pct Density
	-.0030	.0000	1 Pct Air Temp
	.0015	.0000	1 m/s Rangewind
	.0000	.0983	1 m/s Crosswind
	2.4540	.0000	1 MIL Elevation

ASSUMED FIRING TABLE AND EFFECTS DATA
ARPA HE AMMO - 75MM

RANGE (Meters)	SUPERELEVATION (MILS)	DRIFT (MILS)
1500	6.6336	0
2500	12.8519	0

NON STANDARD - STANDARD

RANGE (M)	CHANGE IN HEIGHT (M)	CHANGE IN DRIFT (M)	NON-STD CONDITION
1500	.0198	.0000	1 m/s Velocity
	-.0218	.0000	1 Pct Density
	-.0080	.0000	1 Pct Air Temp
	.0033	.0000	1 m/s Rangewind
	.0000	.1970	1 m/s Crosswind
	1.4738	.0000	1 MIL Elevation
2500	.0633	.0000	1 m/s Velocity
	-.1298	.0000	1 Pct Density
	-.0353	.0000	1 Pct Air Temp
	.0153	.0000	1 m/s Rangewind
	.0000	.6140	1 m/s Crosswind
	2.4553	.0000	1 MIL Elevation

APPENDIX B

OUTPUT TABLES

The computer trial output tables included in this appendix represent a selected sample of the model output for analysis. The effect of each of the four selected weather conditions, which are constant for each of the eight tables, are examined by varying the trial conditions of the round, range, fire control and rounds in the burst.

COMPUTER TRIAL OUTPUT TABLE
FIXED BIAS (MILS)

Conditions:
Round - APFSDS
Range - 1500 M
Fire Control - M60
Air Temp - 0°F

		ENGAGEMENT 1				ENGAGEMENT 2				ENGAGEMENT 3			
		AZIMUTH		ELEVATION		AZIMUTH		ELEVATION		AZIMUTH		ELEVATION	
WEATHER	ROUNDS PER BURST	BEND	TOTAL	BEND	TOTAL	BEND	TOTAL	BEND	TOTAL	BEND	TOTAL	BEND	TOTAL
LIGHT WIND	3	0.00	0.10	0.00	0.08	1.56	1.66	0.00	0.08	2.34	2.44	0.00	0.08
NO RAIN	5	0.00	0.10	0.00	0.08	2.59	2.69	0.00	0.08	3.89	3.99	0.00	0.08
NO WIND	3	0.00	0.00	0.00	0.08	0.00	0.00	4.67	4.75	0.00	0.00	7.01	7.08
LIGHT RAIN	5	0.00	0.00	0.00	0.08	0.00	0.00	7.78	7.86	0.00	0.00	11.68	11.75
HARD WIND	3	0.00	0.30	0.00	0.08	4.67	4.97	0.00	0.08	7.01	7.30	0.00	0.08
NO RAIN	5	0.00	0.30	0.00	0.08	7.78	8.08	0.00	0.08	11.68	11.97	0.00	0.08
NO WIND	3	0.00	0.00	0.00	0.08	0.00	0.00	6.23	6.31	0.00	0.00	9.34	9.42
HARD RAIN	5	0.00	0.00	0.00	0.08	0.00	0.00	10.38	10.46	0.00	0.00	15.57	15.65

COMPUTER TRIAL OUTPUT TABLE
FIXED BIAS (MILS)

Conditions:
Round - HE
Range - 1500 M
Fire Control - M60
Air Temp - $0^{o}F$

		ENGAGEMENT 1				ENGAGEMENT 2				ENGAGEMENT 3			
		AZIMUTH		ELEVATION		AZIMUTH		ELEVATION		AZIMUTH		ELEVATION	
WEATHER	ROUNDS PER BURST	BEND	TOTAL	BEND	TOTAL	BEND	TOTAL	BEND	TOTAL	BEND	TOTAL	BEND	TOTAL
LIGHT WIND	3	0.00	0.55	0.00	0.34	1.56	2.11	0.00	0.34	2.34	2.89	0.00	0.34
NO RAIN	5	0.00	0.55	0.00	0.34	2.59	3.15	0.00	0.34	3.89	4.44	0.00	0.34
NO WIND	3	0.00	0.00	0.00	0.34	0.00	0.00	4.67	5.01	0.00	0.00	7.01	7.34
LIGHT RAIN	5	0.00	0.00	0.00	0.34	0.00	0.00	7.78	8.12	0.00	0.00	11.68	12.01
HARD WIND	3	0.00	1.64	0.00	0.34	4.67	6.31	0.00	0.34	7.01	8.65	0.00	0.34
NO RAIN	5	0.00	1.64	0.00	0.34	7.78	9.43	0.00	0.34	11.68	13.32	0.00	0.34
NO WIND	3	0.00	0.00	0.00	0.34	0.00	0.00	6.23	6.57	0.00	0.00	9.34	9.68
HARD RAIN	5	0.00	0.00	0.00	0.34	0.00	0.00	10.38	10.72	0.00	0.00	15.57	15.91

COMPUTER TRIAL OUTPUT TABLE
FIXED BIAS (MILS)

Conditions:
Round - APFSDS
Range - 2500 M
Fire Control - M60
Air Temp - $0^{o}F$

		ENGAGEMENT 1				ENGAGEMENT 2				ENGAGEMENT 3			
		AZIMUTH		ELEVATION		AZIMUTH		ELEVATION		AZIMUTH		ELEVATION	
WEATHER	ROUNDS PER BURST	BEND	TOTAL	BEND	TOTAL	BEND	TOTAL	BEND	TOTAL	BEND	TOTAL	BEND	TOTAL
LIGHT WIND	3	0.00	0.17	0.00	0.06	1.56	1.72	0.00	0.06	2.34	2.50	0.00	0.06
NO RAIN	5	0.00	0.17	0.00	0.06	2.59	2.76	0.00	0.06	3.89	4.06	0.00	0.06
NO WIND	3	0.00	0.00	0.00	0.06	0.00	0.00	4.67	4.73	0.00	0.00	7.01	7.07
LIGHT RAIN	5	0.00	0.00	0.00	0.06	0.00	0.00	7.78	7.84	0.00	0.00	11.68	11.79
HARD WIND	3	0.00	0.49	0.00	0.06	4.67	5.16	0.00	0.06	7.01	7.50	0.00	0.06
NO RAIN	5	0.00	0.49	0.00	0.06	7.78	8.28	0.00	0.06	11.68	12.17	0.00	0.06
NO WIND	3	0.00	0.00	0.00	0.06	0.00	0.00	6.23	6.29	0.00	0.00	9.34	9.40
HARD RAIN	5	0.00	0.00	0.00	0.06	0.00	0.00	10.38	10.44	0.00	0.00	15.57	15.63

COMPUTER TRIAL OUTPUT TABLE
FIXED BIAS (MILS)

Conditions:
Round - HE
Range - 2500 M
Fire Control - M60
Air Temp - $0^{o}F$

		ENGAGEMENT 1				ENGAGEMENT 2				ENGAGEMENT 3			
		AZIMUTH		ELEVATION		AZIMUTH		ELEVATION		AZIMUTH		ELEVATION	
WEATHER	ROUNDS PER BURST	BEND	TOTAL	BEND	TOTAL	BEND	TOTAL	BEND	TOTAL	BEND	TOTAL	BEND	TOTAL
LIGHT WIND	3	0.00	1.03	0.00	0.71	1.56	2.59	0.00	0.71	2.34	3.37	0.00	0.71
NO RAIN	5	0.00	1.03	0.00	0.71	2.59	3.63	0.00	0.71	3.89	4.92	0.00	0.71
NO WIND	3	0.00	0.00	0.00	0.71	0.00	0.00	4.67	5.38	0.00	0.00	7.01	7.71
LIGHT RAIN	5	0.00	0.00	0.00	0.71	0.00	0.00	7.78	8.49	0.00	0.00	11.68	12.38
HARD WIND	3	0.00	3.07	0.00	0.71	4.67	7.74	0.00	0.71	7.01	10.08	0.00	0.71
NO RAIN	5	0.00	3.07	0.00	0.71	7.78	10.85	0.00	0.71	11.68	14.75	0.00	0.71
NO WIND	3	0.00	0.00	0.00	0.71	0.00	0.00	6.23	6.93	0.00	0.00	9.34	10.05
HARD RAIN	5	0.00	0.00	0.00	0.71	0.00	0.00	10.38	11.09	0.00	0.00	15.57	16.27

COMPUTER TRIAL OUTPUT TABLE
FIXED BIAS (MILS)

Conditions:
Round - APFSDS
Range - 1500 M
Fire Control - XM-1
Air Temp - 0°F

		ENGAGEMENT 1				ENGAGEMENT 2				ENGAGEMENT 3			
		AZIMUTH		ELEVATION		AZIMUTH		ELEVATION		AZIMUTH		ELEVATION	
WEATHER	ROUNDS PER BURST	BEND	TOTAL	BEND	TOTAL	BEND	TOTAL	BEND	TOTAL	BEND	TOTAL	BEND	TOTAL
LIGHT WIND	3	0.00	0.00	0.00	0.00	1.56	1.56	0.00	0.00	2.34	2.34	0.00	0.00
NO RAIN	5	0.00	0.00	0.00	0.00	2.59	2.60	0.00	0.00	3.89	3.89	0.00	0.00
NO WIND	3	0.00	0.00	0.00	0.00	0.00	0.00	4.67	4.67	0.00	0.00	7.01	7.01
LIGHT RAIN	5	0.00	0.00	0.00	0.00	0.00	0.00	7.78	7.79	0.00	0.00	11.68	11.68
HARD WIND	3	0.00	0.01	0.00	0.00	4.67	4.68	0.00	0.00	7.01	7.01	0.00	0.00
NO RAIN	5	0.00	0.01	0.00	0.00	7.78	7.79	0.00	0.00	11.68	11.68	0.00	0.00
NO WIND	3	0.00	0.00	0.00	0.00	0.00	0.00	6.23	6.23	0.00	0.00	9.34	9.34
HARD RAIN	5	0.00	0.00	0.00	0.00	0.00	0.00	10.38	10.38	0.00	0.00	15.57	15.57

COMPUTER TRIAL OUTPUT TABLE
FIXED BIAS (MILS)

Conditions:
Round - HE
Range - 1500 M
Fire Control - XM-1
Air Temp - 0°F

		ENGAGEMENT 1				ENGAGEMENT 2				ENGAGEMENT 3			
		AZIMUTH		ELEVATION		AZIMUTH		ELEVATION		AZIMUTH		ELEVATION	
WEATHER	ROUNDS PER BURST	BEND	TOTAL	BEND	TOTAL	BEND	TOTAL	BEND	TOTAL	BEND	TOTAL	BEND	TOTAL
LIGHT WIND	3	0.00	0.02	0.00	0.01	1.56	1.57	0.00	0.01	2.34	2.35	0.00	0.01
NO RAIN	5	0.00	0.02	0.00	0.01	2.59	2.61	0.00	0.01	3.89	3.91	0.00	0.01
NO WIND	3	0.00	0.00	0.00	0.01	0.00	0.00	4.67	4.68	0.00	0.00	7.01	7.01
LIGHT RAIN	5	0.00	0.00	0.00	0.01	0.00	0.00	7.78	7.79	0.00	0.00	11.68	11.68
HARD WIND	3	0.00	0.05	0.00	0.01	4.67	4.72	0.00	0.01	7.01	7.05	0.00	0.01
NO RAIN	5	0.00	0.05	0.00	0.01	7.78	7.83	0.00	0.01	11.68	11.72	0.00	0.01
NO WIND	3	0.00	0.00	0.00	0.01	0.00	0.00	6.23	6.24	0.00	0.00	9.34	9.35
HARD RAIN	5	0.00	0.00	0.00	0.01	0.00	0.00	10.38	10.39	0.00	0.00	15.57	15.58

COMPUTER TRIAL OUTPUT TABLE
FIXED BIAS (MILS)

Conditions:
Round - APFSDS
Range - 2500 M
Fire Control - XM-1
Air Temp - 0°F

		ENGAGEMENT 1				ENGAGEMENT 2				ENGAGEMENT 3			
		AZIMUTH		ELEVATION		AZIMUTH		ELEVATION		AZIMUTH		ELEVATION	
WEATHER	ROUNDS PER BURST	BEND	TOTAL	BEND	TOTAL	BEND	TOTAL	BEND	TOTAL	BEND	TOTAL	BEND	TOTAL
LIGHT WIND	3	0.00	0.00	0.00	0.00	1.56	1.56	0.00	0.00	2.34	2.34	0.00	0.00
NO RAIN	5	0.00	0.00	0.00	0.00	2.59	2.60	0.00	0.00	3.89	3.90	0.00	0.00
NO WIND	3	0.00	0.00	0.00	0.00	0.00	0.00	4.67	4.67	0.00	0.00	7.01	7.01
LIGHT RAIN	5	0.00	0.00	0.00	0.00	0.00	0.00	7.78	7.79	0.00	0.00	11.68	11.68
HARD WIND	3	0.00	0.01	0.00	0.00	4.67	4.68	0.00	0.00	7.01	7.02	0.00	0.00
NO RAIN	5	0.00	0.01	0.00	0.00	7.78	7.80	0.00	0.00	11.68	11.69	0.00	0.00
NO WIND	3	0.00	0.00	0.00	0.00	0.00	0.00	6.23	6.23	0.00	0.00	9.34	9.34
HARD RAIN	5	0.00	0.00	0.00	0.00	0.00	0.00	10.38	10.38	0.00	0.00	15.57	15.57

COMPUTER TRIAL OUTPUT TABLE
FIXED BIAS (MILS)

Conditions:
Round - HE
Range - 2500 M
Fire Control - XM-1
Air Temp - 0°F

		ENGAGEMENT 1				ENGAGEMENT 2				ENGAGEMENT 3			
		AZIMUTH		ELEVATION		AZIMUTH		ELEVATION		AZIMUTH		ELEVATION	
WEATHER	ROUNDS PER BURST	BEND	TOTAL	BEND	TOTAL	BEND	TOTAL	BEND	TOTAL	BEND	TOTAL	BEND	TOTAL
LIGHT WIND	3	0.00	0.03	0.00	0.02	1.56	1.59	0.00	0.02	2.34	2.37	0.00	0.02
NO RAIN	5	0.00	0.03	0.00	0.02	2.59	2.63	0.00	0.02	3.89	3.92	0.00	0.02
NO WIND	3	0.00	0.00	0.00	0.02	0.00	0.00	4.67	4.69	0.00	0.00	7.01	7.03
LIGHT RAIN	5	0.00	0.00	0.00	0.02	0.00	0.00	7.78	7.81	0.00	0.00	11.68	11.70
HARD WIND	3	0.00	0.09	0.00	0.02	4.67	4.76	0.00	0.02	7.01	7.10	0.00	0.02
NO RAIN	5	0.00	0.09	0.00	0.02	7.78	7.88	0.00	0.02	11.68	11.77	0.00	0.02
NO WIND	3	0.00	0.00	0.00	0.02	0.00	0.00	6.23	6.25	0.00	0.00	9.34	9.36
HARD RAIN	5	0.00	0.00	0.00	0.02	0.00	0.00	10.38	10.40	0.00	0.00	15.57	15.59

APPENDIX C

COMPUTER PROGRAM

The computer program included in this appendix is that written for simulation of the miss distance and barrel bend models. The only changes required to simulate the various fire control system approximations (M60 or XM-1) are to change the data inputs for percentage of residual sensing errors and for Round-to-Round, Burst-to-Burst, and Occasion-to-Occastion dispersion. The program may also be adapted to different gun barrels by inserting the physical characteristics of the gun and an approximation for gun barrel surface temperature.

```
C       ACTDTY=CALCULATED AIR DENSITY
C       ACTRWC=ACTUAL RANGEWIND
C       ACTVEL=CALCULATED MUZZEL VELOCITY
C       ALEN=LENGTH OF UNSUPPORTED PORTION OF BARREL IN MM
C       ALPHA=COEFFICIENT OF THERMAL EXPANSION
C       ALTDEF=FIRING TABLE EFFECT OF 1 MIL MUZZLE LATERAL DEFLECTION
C       ATMP=AIR TEMPERATURE
C       BCON=CONSTANT BEND COEFFICIENT
C       BTBX=BURST TO BURST AZIMUTH STANDARD DEVIATION
C       BTBY=BURST TO BURST ELEVATION STANDARD DEVIATION
C       CON1=AIR DENSITY RESIDUAL SENSING ERROR
C       CON2=AIR TEMPERATURE RESIDUAL SENSING ERROR
C       CON3=WIND RESIDUAL SENSING ERROR
C       CUMHT=CUMULATIVE HEAT FACTOR
C       CWND=CROSSWIND LEFT TO RIGHT
C       DELTX=TEMPERATURE DIFFERENTIAL IN X AXIS
C       DELTY=TEMPERATURE DIFFERENTIAL IN Y AXIS
C       EE=COOLING FACTOR
C       ETATMP=FIRING TABLE EFFECT OF 1% CHANGE FROM STANDARD AIR TEMP
C       ETCWND=FIRING TABLE EFFECT OF CROSSWIND(M/S)
C       ETDNTY=FIRING TABLE EFFECT OF 1% CHANGE FROM STANDARD AIR  DENSITY
C       ETDRFT=FIRING TABLE PROJECTILE DRIFT
C       ETELEV=FIRING TABLE EFFECT OF 1 MIL ELEVATION OF MUZZLE
C       ETRGWD=FIRING TABLE EFFECT OF RANGEWIND(M/S)
C       ETRNGE=FIRING TABLE RANGE
C       ETSPEL=FIRING TABLE SUPERELEVATION
C       ETTPRD=FIRING TABLE TYPE ROUND
C       ETVLTY=FIRING TABLE EFFECT OF MUZZLE VELOCITY CHANGE FROM STANDARD
C       NBRST=NUMBER OF BURSTS
C       NENG=ENGAGEMENT NUMBER
C       NRDS=NUMBER OF ROUNDS
C       OTOX=OCCASION TO OCCASION AZIMUTH STANDARD DEVIATION
C       OTOY=OCCASION TO OCCASION ELEVATION STANDARD DEVIATION
C       RAIN=RAIN
C       RI=INNER BARREL RADIUS THROUGH UNSUPPORTED LENGTH IN MM
C       RO=OUTER BARREL RADIUS THROUGH UNSUPPORTED LENGTH IN MM
C       RTRX=ROUND TO ROUND AZIMUTH STANDARD DEVIATION
C       RTRY=ROUND TO ROUND ELEVATION STANDARD DEVIATION
C       STATMP=STANDARD AIR TEMPERATURE AT 1000 FEET
C       STDNTY=STANDARD AIR DENSITY AT 1000 FEET
C       STDVEL=FIRING TABLE STD MUZZLE VELOCITY
C       VAPRES=VAPOR PRESSURE
C       VELBB=CHANGE IN VELOCITY FROM BARREL BEND
C       VELPT=CHANGE IN VELOCITY DUE TO CHANGE IN PROPELLANT TEMPERATURE
C       XBLBND= BARREL BEND IN X AXIS
C       XERROR=MISS DISTANCE IN X AXIS AT TARGET PLANE
C       XGNAIM=GUNNER MUZZLE AIM IN X AXIS
C       YBLBND=BARREL BEND EFFECT IN Y AXIS
C       YERROR=MISS DISTANCE IN Y AXIS AT TARGET PLANE
C       YGNAIM=GUNNER MUZZLE AIM IN Y AXIS
        DIMENSION ATMP(15),CWND(15),RAIN(15),VAPRES(15),EE(2,15),
       1ETTPRD(4),ETRNGE(4),ETVLTY(4),ETDNTY(4),ETATMP(4),ETRGWD(4),
       2ETCWND(4),ETELEV(4),ETDRFT(4),ETSPEL(4),STDVEL(4),ALTDEF(4),
       3RTRX(4),RTRY(4),BTBX(4),BTBY(4),OTOX(4),OTOY(4),
       4CUMHT(2),NRDS(3),A(6),B(20),C(20)
        DIMENSION IET(4,10),IWET(15,10)
        DO 10 J=1,15
        READ(5,1100) ATMP(J),CWND(J),RAIN(J),VAPRES(J),EE(1,J),EE(2,J)
 1000 FORMAT(6F10.0)
   10 CONTINUE
        DO 20 K=1,4
        READ(5,1100) ETTPRD(K),ETRNGE(K),ETVLTY(K),ETDNTY(K),ETATMP(K),
       1ETRGWD(K),ETCWND(K),ETELEV(K),ETDRFT(K),ETSPEL(K),STDVEL(K),
       2ALTDEF(K)
 1100 FORMAT(12F6.0)
   20 CONTINUE
        DO 30 L=1,4
        READ(5,1200) RTRX(L),RTRY(L),BTBX(L),BTBY(L),OTOX(L),OTOY(L)
 1200 FORMAT(6F10.0)
   30 CONTINUE
        READ(5,1300) ALEN,ALPHA,RO,RI,(CUMHT(I),I=1,2)
 1300 FORMAT(6F10.0)
        READ(5,1400) STDNTY,STATMP,ACTRWD,XGNAIM,XTNECS,YTNECS,VELPT,
```

```
      1VELBB,CON1,CON2,CON3
 1400 FORMAT(11F7.0)
      READ(5,1500) NBRST,(NRDS(I),I=1,3),NENG
 1500 FORMAT(5I10)
      DO 40 KZ=1,4
      READ(5,9000)(IFT(KZ,KY),KY=1,10)
 9000 FORMAT(10A4)
   40 CONTINUE
      DO 50 KZ=1,15
      READ(5,9000)(IWET(KZ,KY),KY=1,10)
   50 CONTINUE
      RAD4=(PO**4-RI**4)
      ATCMP=PO/RI
      ALAM=(RI**3/ALOG(ATCMP))*(((1./3.)*(ATCMP**3))*(ALOG(ATCMP))
     1-((1./9.)*(ATCMP**3))+(1./9.))
      BCON=1018.6*ALFA*ALAM*ALPHA/RAD4
      DO 500 I=1,4
      DO 400 J=1,15
      DO 360 LL=2,3
      NNRD=NRDS(LL)
      DO 355 KK=1,2
      CUMMT=CUMHT(KK)
      DO 350 KT=1,3
   35) NPD(KT)=0
      WRITE(6,2100)(IFT(I,KY),KY=1,10),(IWET(J,KZ),KZ=1,10),NNRD,CUMMT
 2100 FORMAT(1H1,9X,'FIRING TABLE ---',10A4,/
     11X,'WEATHER CASE --- ',10A4,/
     21CX,'ROUNDS PER BURST ',I2/
     31CX,'ADDITIVE HEAT EFFECT FACTOR ',F5.2)
      WRITE(6,2200)
 2200 FORMAT(//1X,'ENG. NO.  BURST NO. ROUND NO.',12X,
     1'FIXED BIAS (MILS)',15X,'RANDOM ERROR (MILS)',1X,
     2'TOTAL ERROR (METERS)'/35X,'AZIMUTH',13X,'ELEVATION',10X,
     3'AZIMUTH',3X,'ELEVATION',1X,'AZIMUTH',3X,'ELEVATION',/
     434X,'BEND',6X,'TOTAL',5X,'BEND',6X,'TOTAL',//)
      DO 300 K=1,NENG
      IF(K.GT.1)GOTO210
      XBLBND=0.
      YBLBND=0.
      GOTO250
   210 CONTINUE
      IF(K.GT.2)GOTO220
      ATEMP=ATMP(J)+(19.8*NRD(1))
      GOTO230
   220 CONTINUE
      ATEMP=ATMP(J)+(19.8*(NRD(2)+(CUMMT*NPD(1))))
      GOTO230
   230 CONTINUE
      DELTX=FF(1,J)*(ATEMP-ATMP(J))
      DELTY=FF(2,J)*(ATEMP-ATMP(J))
      XBLBND=BCON*DELTX
      YBLBND=BCON*DELTY
   250 CONTINUE
      XM=XGNAIM+XBLBND+XTNFCS
      XT=FTDRFT(I)+(FTCRWD(I)*CWND(J)*CON3)+(*LTDEF(I)*XM)
      XTI=XT/ALTDEF(I)
      C1=FTSPEL(I)*FTELEV(I)
      ACTVEL=STDVEL(I)+(VELRT+VELBB)
      YV=ACTVEL-STDVEL(I)
      ACTDTY=(.001293/(1.+(.002039*(ATMP(J)-32.))))*((28.82-(.378
     1*VAPRES(J)))/29.921)
      YD=((ACTDTY-STDNTY)/STDNTY)*1)).
      YA=((ATMP(J)-60.)/60.)*100.
      YM=FTSPEL(I)+YBLBND+YTNFCS
      YT=-1.*C1+(FTVLTY(I)*YV)+(FTDNTY(I)*YD*CON1)+(FTATMP(I)*YA*CON2)
     1+(FTRCWD(I)*ACTCWD*CON3)+(FTELEV(I)*YM)
      YTI=YT/FTELEV(I)
      IS=123456+K*NBRST
      CALL SNORM(IS,A,2)
      XI=QTCX(I)*A(1)
      YI=QTCY(I)*A(2)
      DO 200 L=1,NBRST
      IT=132456+K*NBRST*NNRD+L*NNRD
```

```
      ITF=2*NBRST
      CALL SNORM(IT,B,ITE)
      X2=BTBX(I)*B(2*L-1)
      Y2=BTBY(I)*B(2*L)
      DO 100 M=1,NNRD
      NRC(K)=NRC(K)+1
      IU=132546+K*NBRST*NNRD+L*NNRD+M
      ITF=2*NNRD
      CALL SNORM(IU,C,ITE)
      X3=BTBX(I)*C(2*M-1)
      Y3=BTBY(I)*C(2*M)
      SIGX=X1+X2+X3
      SIGY=Y1+Y2+Y3
      XTT=(XT1+X1+X2+X3)*ALTDEF(I)
      YTT=(YT1+Y1+Y2+Y3)*ETELEV(I)
      WRITE(6,2000)K,L,M,XBLBND,XT1,YBLBND,YT1,SIGX,SIGY,XTT,YTT
 2000 FORMAT(3(3X,I3,4X),8E10.2)
  100 CONTINUE
  200 CONTINUE
  300 CONTINUE
  355 CONTINUE
  360 CONTINUE
  400 CONTINUE
  500 CONTINUE
      STOP
      END
```

BIBLIOGRAPHY

1. Department of the Army, United States Army Armor and Engineer Board UNCLASSIFIED Letter ATZK-AE-TA to US Naval Postgraduate School, Attn: Code 55 Py, Subject: Coordination Meeting, Armored Combat Vehicle Technology Program, 12 November 1976.

2. Frankford Arsenal Report R-2069, An Evaluation Of Fire Control Systems For Use With Automatic Cannon On Combat Vehicles, by Kenneth R. Pfleger and Louis R. Cerrato, February 1973.

3. Frankford Arsenal Report R-1380A, Fire Control Studies, Tank Gunnery Accuracy Evaluation, by Harold Brodkin, February 1958.

4. Frankford Arsenal Report R-1937, The Evaluation Of Combat Vehicle Fire Control/Gunnery Systems, by Kenneth R. Pfleger and Robert J. Bibbero, September 1969.

5. Frankford Arsenal AD/A-001 533, Multiple Round Hit Probabilities With Combat Vehicle Fire Control Gun Systems, by Louis R. Cerrato, et al, May 1974.

6. Ballistic Research Laboratories Report No. 1371, The Production Of Firing Tables For Cannon Artillery, by Elizabeth R. Dickinson, November 1967.

7. Humphreys, W. J., Physics of the Air, 2d ed., McGraw-Hill, 1929.

8. Smithsonian Meterological Tables, 5th Revised ed., Smithsonian Institute, 1939.

9. General Motors Corporation UNCLASSIFIED Letter HMG-510 to BDM Corporation, Subject: Minimum Fire Control Configuration To Meet Performance Specifications, 24 February 1977.

10. U.S. Army Armament Command, Final Technical Report - 75mm Low Reaction, Hypervelocity Ballistics Program, Solid Propellant Weapon, Phase II - Program, Volume 1, by ARES, Inc., Erie Industrial Park, Port Clinton, Ohio, October 1975.

11. Giedt, W. H., "Investigation of Variation of Point Unit-Heat-Transfer Coefficient Around a Cylinder Normal to an Air Streat", Trans. A.S.M.E., V. 71, 1949.

12. ARES, Inc., Erie Industrial Park, Port Clinton, Ohio, Drawing Number 4014, Barrel, 75mm, HIMAG Automatic Gun, 14 Jun 77.

13. Popov, Egor P., Introduction To Mechanics of Solids, Prentice Hall, 1968.

14. Krieth, Frank, Principles of Heat Transfer, 3rd ed., Intext Publishers, 1973.

INITIAL DISTRIBUTION LIST

		No. Copies
1.	Defense Documentation Center Cameron Station Alexandria, Virginia 22314	2
2.	Library, Code 0142 Naval Postgraduate School Monterey, California 93940	2
3.	Department Chairman, Code 36 Department of Operations Research and Administrative Sciences Naval Postgraduate School Monterey, California 93940	1
4.	Professor Samuel H. Parry Department of Operations Research and Administrative Sciences Naval Postgraduate School Monterey, California 93940	1
5.	MAJ W. Wayne Cannon Naval Postgraduate School SMC 1230 Monterey, California 93940	1
6.	CPT John J. Sweeney United States Army Armor Center Fort Knox, Kentucky 40121	1
7.	Command and General Staff College ATTN: Educational Advisor Room 123, Bell Hall Fort Leavenworth, Kansas 66027	1
8.	Headquarters Department of the Army Office of the Deputy Chief of Staff for Operations and Plans ATTN: DAMO-ZD Washington, D.C. 20310	1
9.	Defense Advanced Research Projects Agency 1400 Wilson Blvd. Arlington, Virginia 22209 ATTN: Major Terry Covington	1

10. President, Armor and Engineer Board — 1
USA Armor Center
Fort Knox, Kentucky 40121
ATTN: Mr. Jim Kelton

11. The BDM Corporation — 1
P.O. Box 2019
1340 Munras Avenue
Monterey, California 93940
ATTN: Mr. Dwight Clark

12. Headquarters ARRADCOM — 1
Picatinny Arsenal
Dover, New Jersey 07801
ATTN: Major J. Houle

13. Benet Weapons Lab — 1
Watervliet Arsenal,
New York 12189
ATTN: DRDAR-LCB, Mr. Paul K. Rummel

Thesis
C19438
c.1

171770

Cannon
Error budget analysis
of automatic cannons on
armored combat vehicles.

thesC19438missing
Error budget analysis of automatic canno
3 2768 002 08494 9
DUDLEY KNOX LIBRARY